TECNOVAP

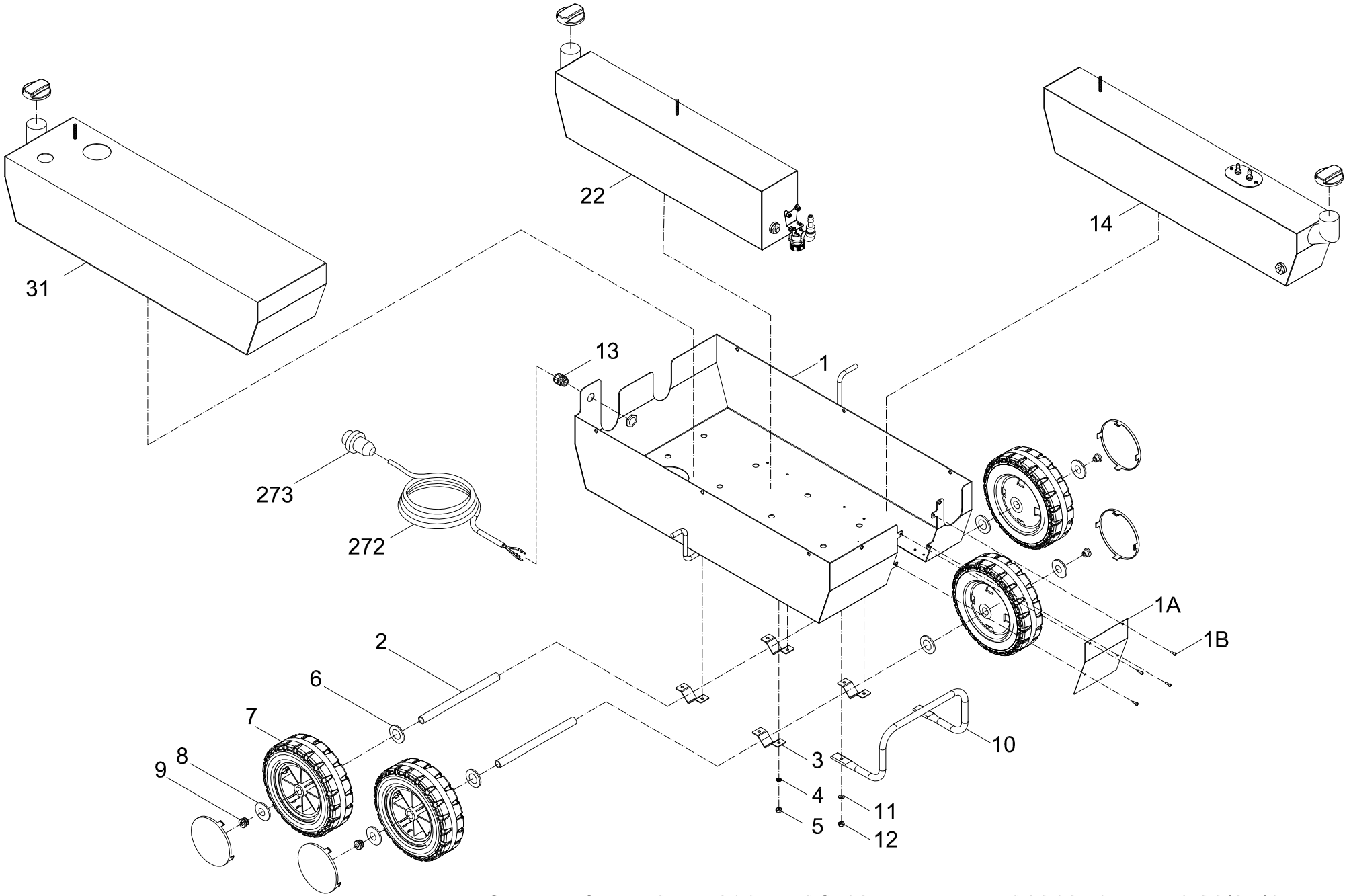

STEAM SKY 40KW 230V H2O 10 bar cod.7W01010V3 REV.1 26/07/17 pag.1/8

TECNOVAP

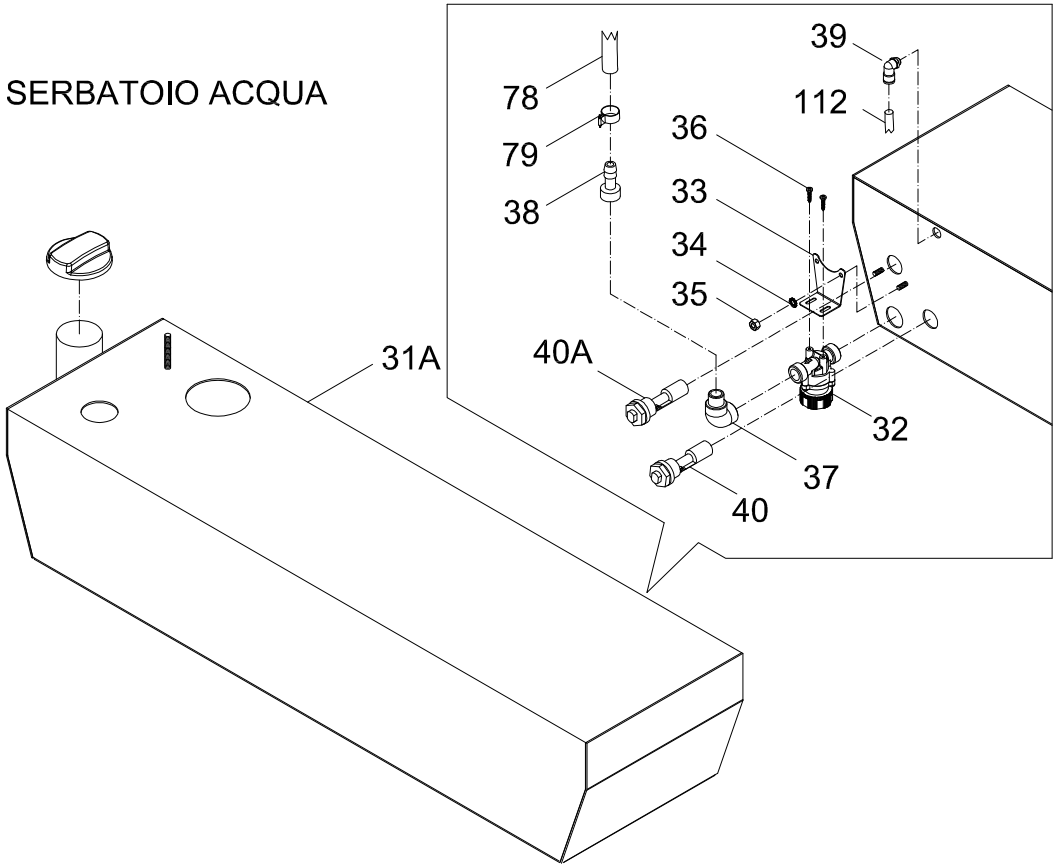
SERBATOIO ACQUA
78
79
38
39
112
36
33
34
35
40A
31A
32
37
40

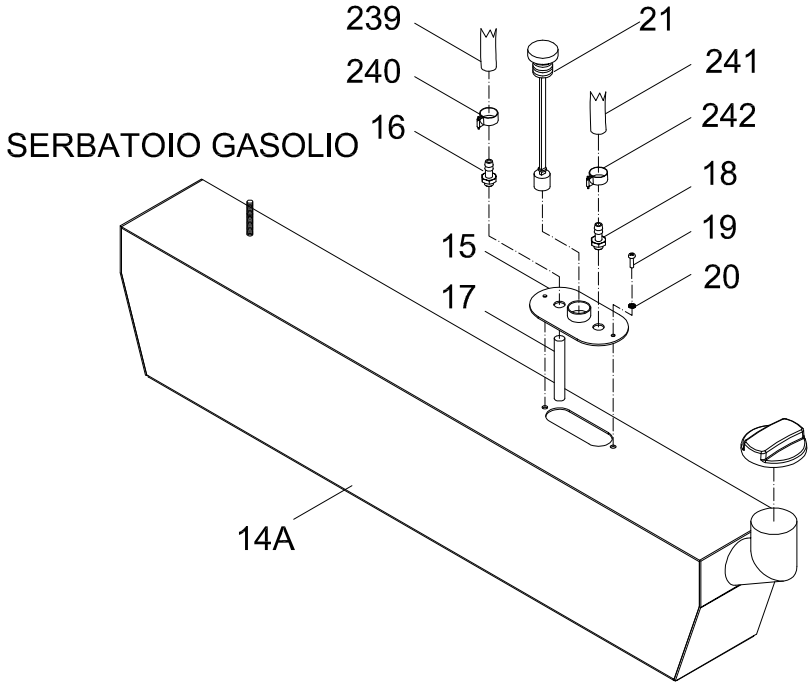
SERBATOIO GASOLIO
239
240
16
21
241
242
18
19
20
15
17
14A

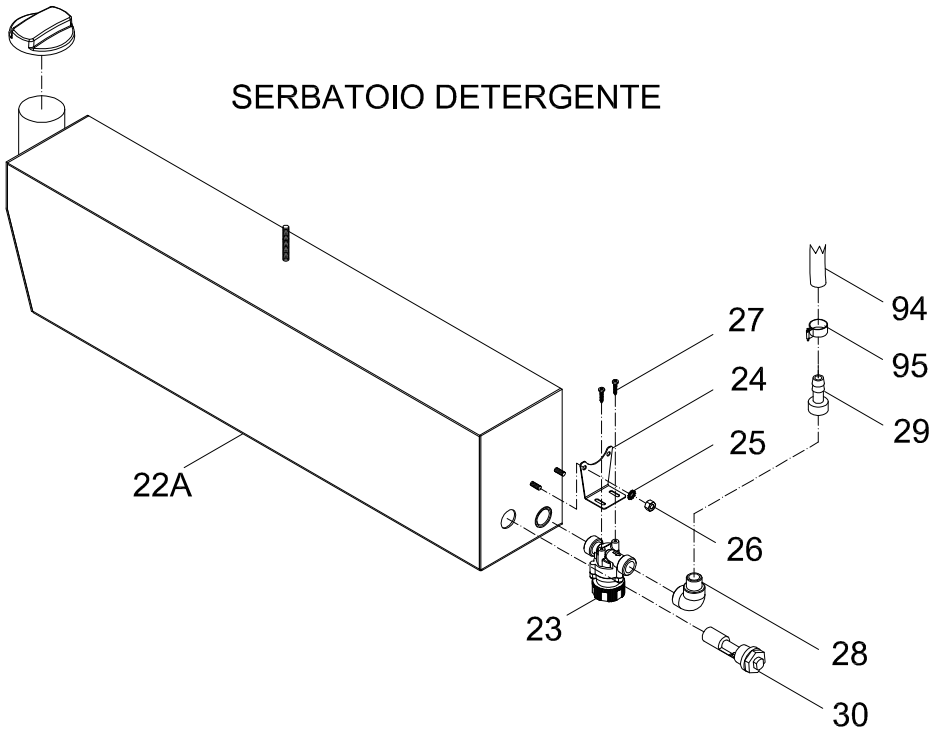
SERBATOIO DETERGENTE
94
95
29
27
24
25
26
22A
23
28
30

TECNOVAP

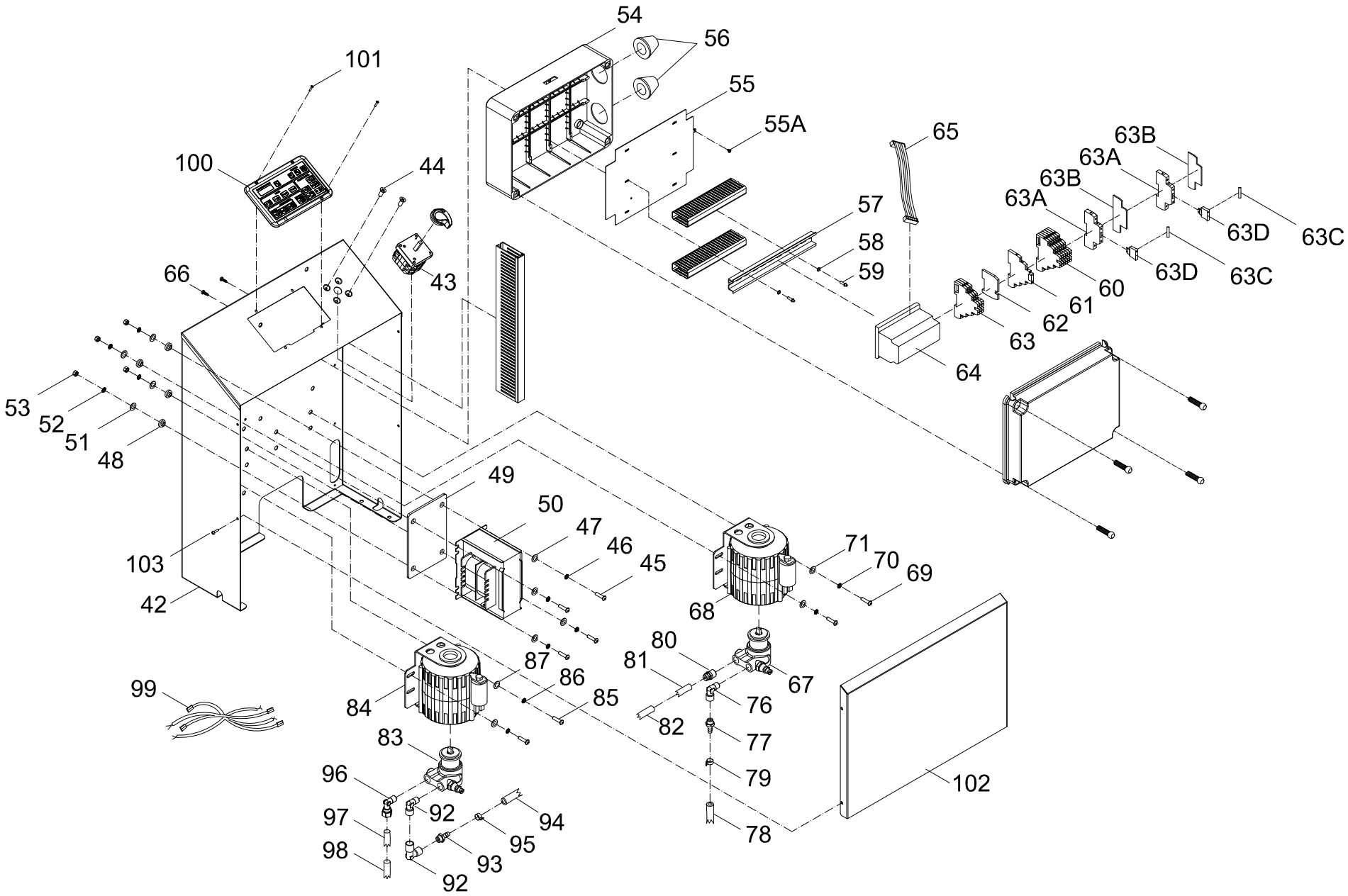

54
56
101
55
55A
65
63B
63A
63B
63A
100
44
57
63D
63C
58
59
66
43
63D
63C
60
61
62
63
64
53
52
51
48
49
50
47
46
45
71
70
69
103
42
68
80
81
67
87
86
99
84
85
76
82
77
83
79
96
102
92
94
97
95
78
98
93
92

TECNOVAP

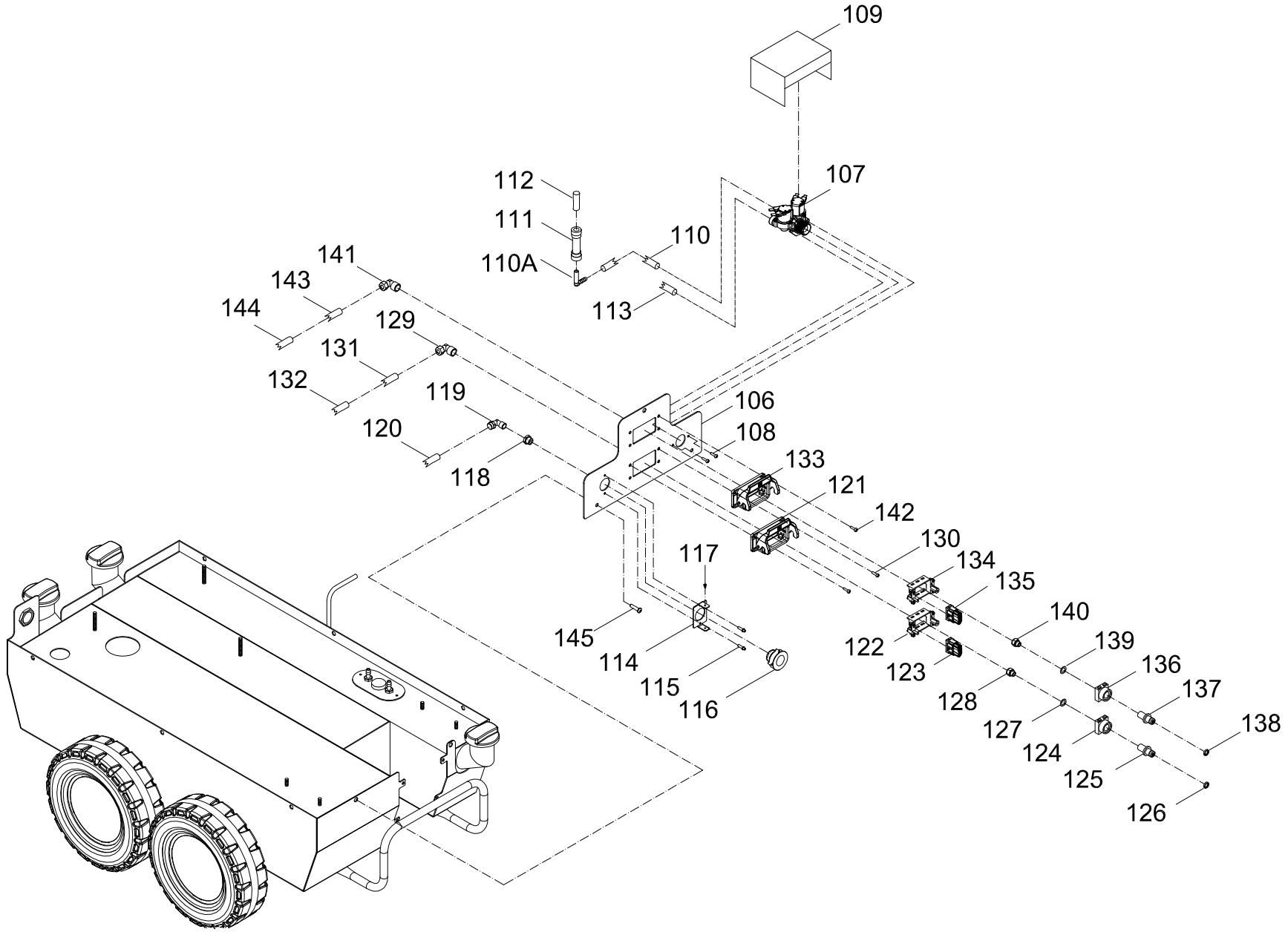
109
107
112
111
110
110A
113
141
143
144
129
131
132
119
120
118
106
108
133
121
142
130
134
135
140
139
136
137
138
126
125
124
127
128
123
122
117
145
114
115
116

TECNOVAP

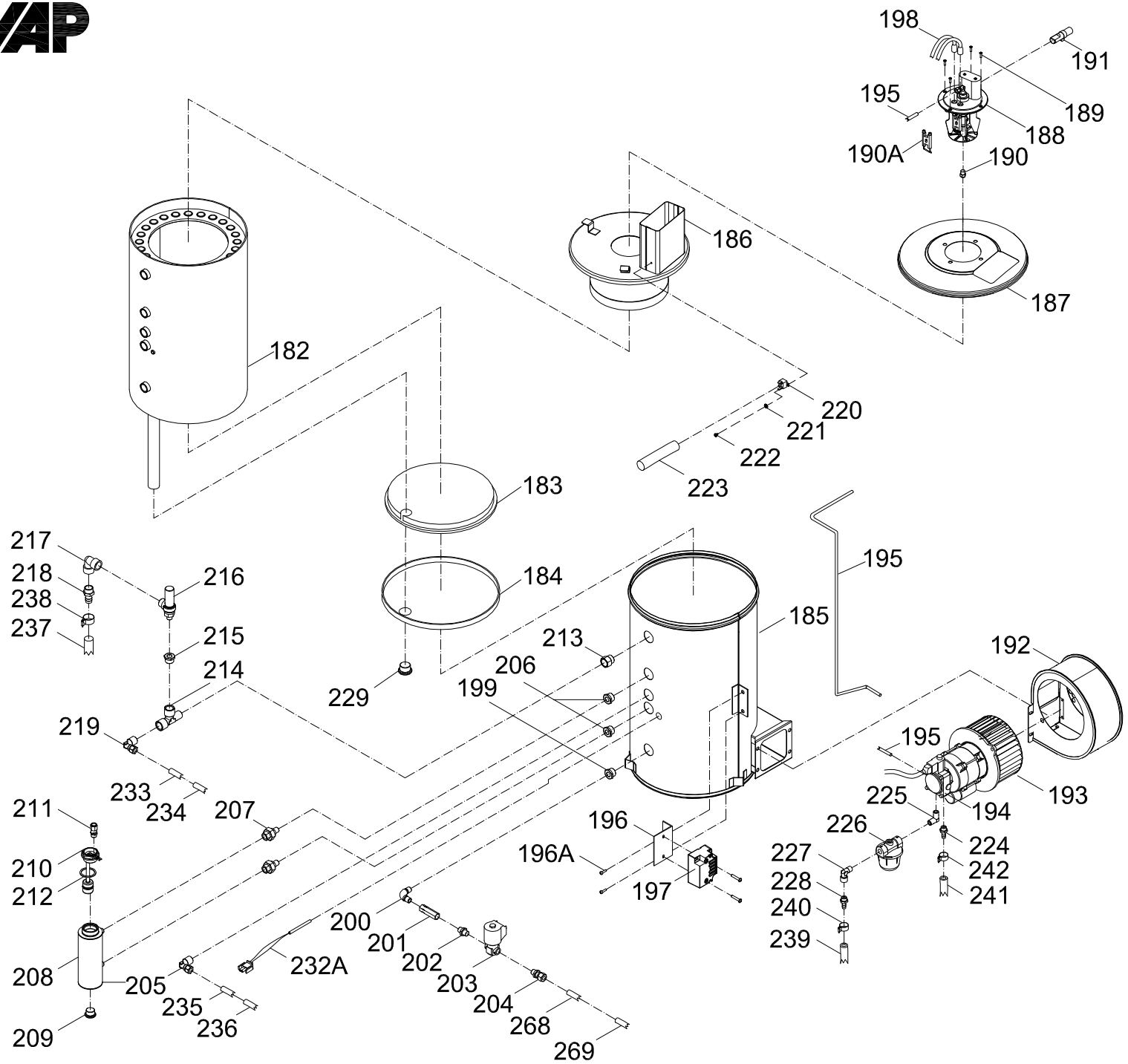
198
191
195
189
188
190A
190
186
187
182
220
221
222
223
183
184
195
217
218
238
237
216
215
214
229
213
206
199
185
192
219
195
193
194
225
226
224
242
241
233
234
207
211
210
212
196
196A
197
227
228
240
239
200
201
202
203
204
268
269
232A
208
205
235
236
209

TECNOVAP

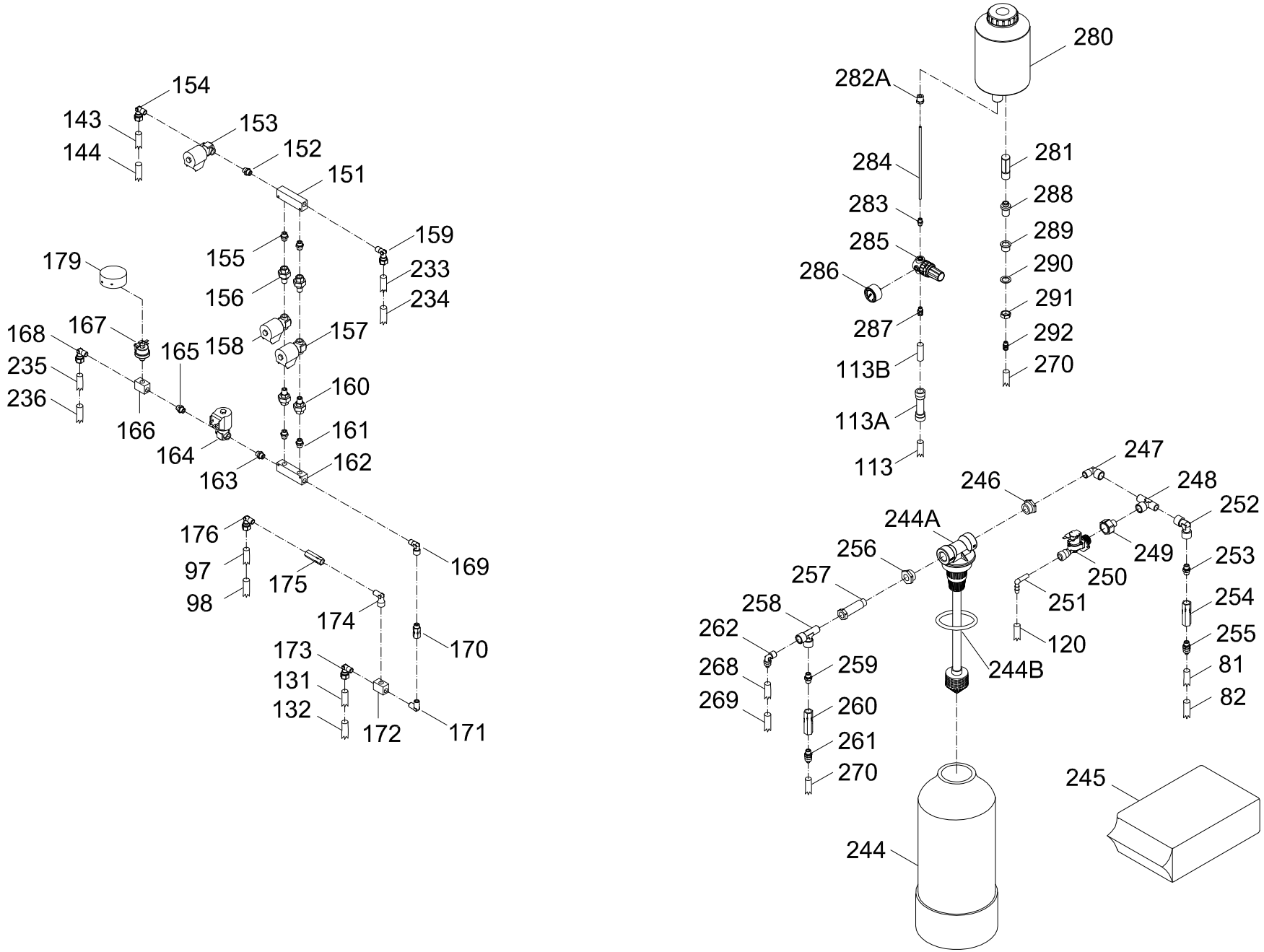
154
143
153
144
152
151
159
155
233
179
156
234
167
168
165
158
157
235
160
236
166
161
164
162
163
176
169
97
175
98
174
170
173
131
132
172
171
280
282A
281
284
288
283
289
285
290
286
291
287
292
113B
270
113A
113
247
246
248
252
244A
249
256
253
250
257
251
254
258
120
255
262
244B
81
268
259
82
269
260
261
270
245
244

TECNOVAP

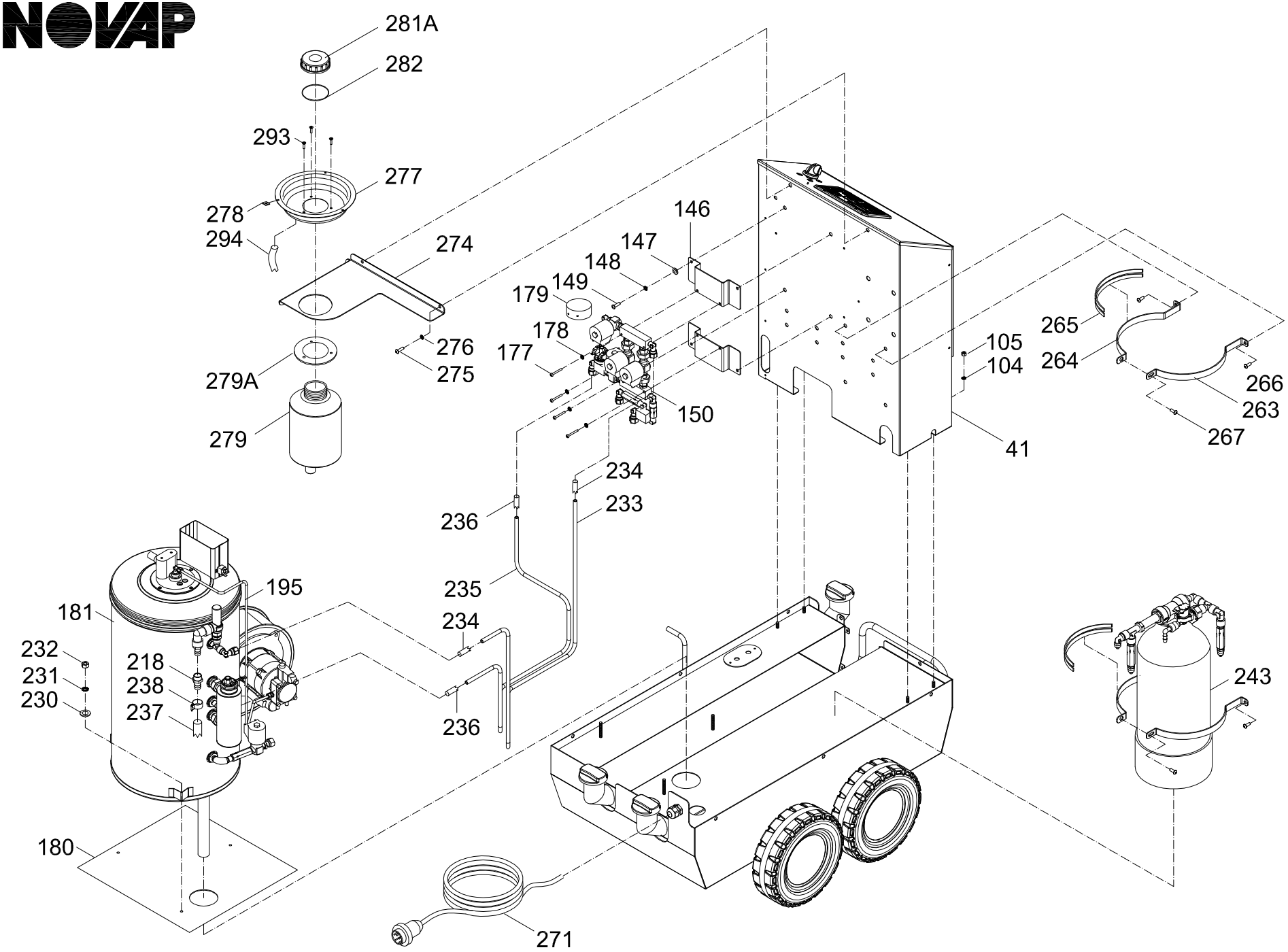
281A
282
293
277
278
294
274
276
275
279A
279
146
147
148
149
179
178
177
150
105
104
41
265
264
266
263
267
234
233
236
235
234
236
195
181
232
231
230
218
238
237
180
243
271

TECNOVAP

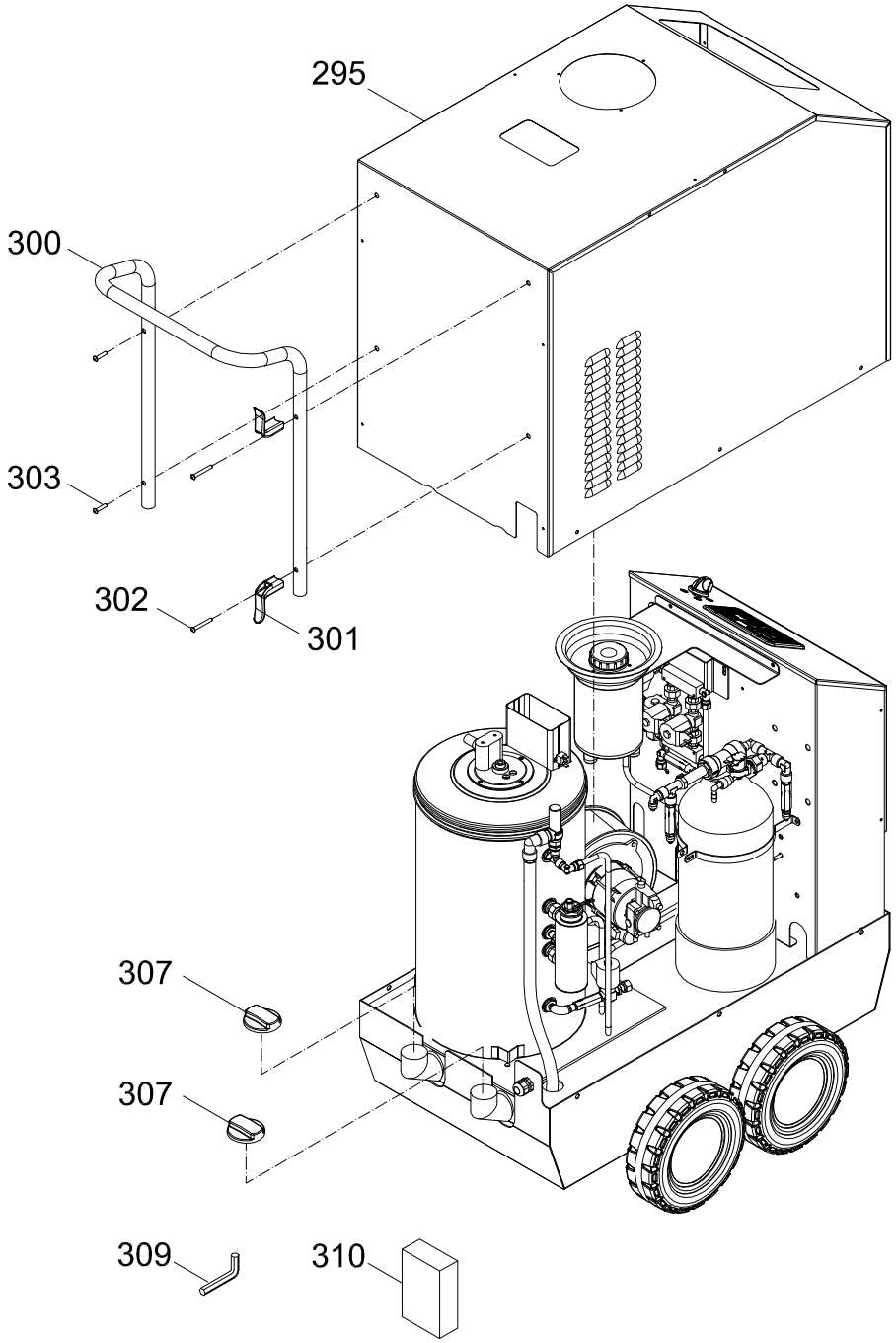

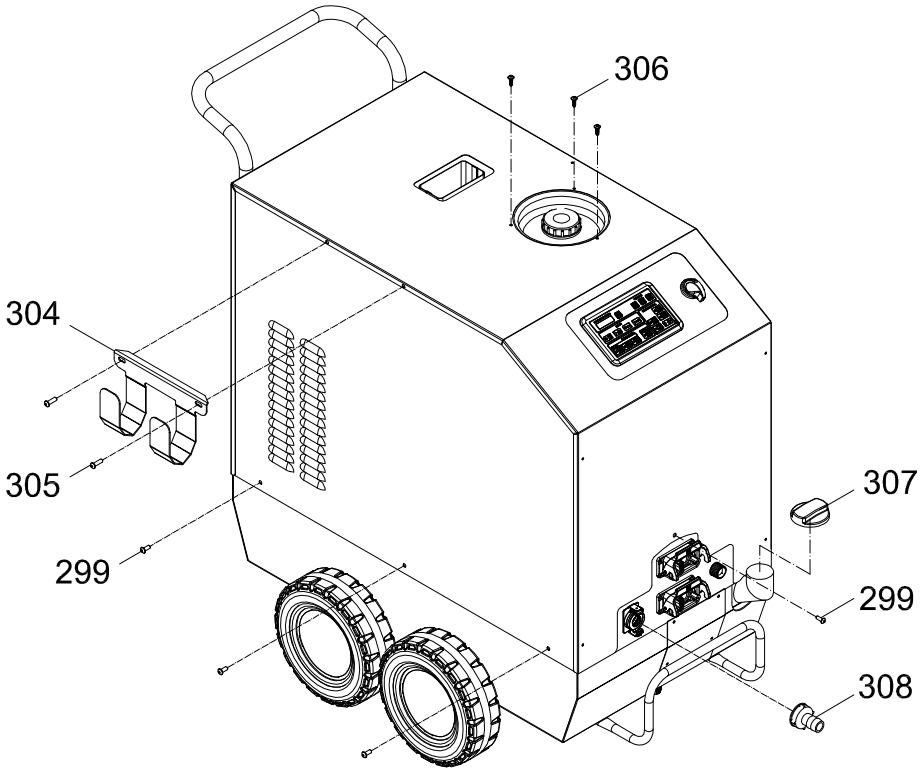

STEAM SKY cod. 7W01010V3 REV.1 26/07/17				
Pos.	**CODICE**	**Q.tà**	**DENOMINAZIONE**	**DENOMINATION**
1	CA7200SV2	1	BASE PRINCIPALE STEAM SKY SALDATA	PRINCIPAL BASE WELDED
1A	CA72090	1	CHIUSURA BASE STEAM SKY	CLOSING BASIC STEAM SKY
1B	VI71216	4	VITE TC TC M4x10 INOX UNI7687 DIN7985A	SCREW M4x10
2	CR72000	2	PERNO RUOTE L.657 CON FILETTI G3/8" F	PIVOT WHEELS L.657 WITH THREADS G3/8"F
3	CA72010	4	STAFFA RUOTE STEAM SKY	BRACKET WHEELS
4	VI73036	8	RONDELLA DENTELLATA M6 INOX	WASHER
5	VI76012	8	DADO M6 INOX UNI5588 ISO4032 UNI EN24032	NUT
6	VI7336	4	RONDELLA INOX M20 UNI6592 DIN125A	WASHER
7	R00N250	4	RUOTA Ø250 STEAM SKY	WHEEL Ø250
8	CR4006E	4	RONDELLA 16.5x32 PER RUOTE CARRELLO INOX	WASHER
9	RA3163	4	TAPPO DRENAGGIO 3/8"M FILETT.CIL. C/OR	CAP
10	CR72010	1	MANIGLIA PROTEZIONE STEAM SKY	HANDLE PROTECTION
11	85140900	2	RONDELLA GREMBIALINA M6 INOX	WASHER
12	85130800	2	DADO M6 INOX UNI 5587	NUT
13	PE23612	1	PRESSACAVO OTT/NIC PG16 + GHIERA	CABLE PRESS
14	SB7G00CV1	1	SERBATOIO GASOLIO STEAM SKY COMPL	FUEL TANK
14A	SB7G000V1	1	SERBATOIO GASOLIO STEAM SKY	FUEL TANK
15	CA72G2SV1	1	FLANGIA ATTACCHI SERBATOIO GASOLIO STEAM SKY SALDATA	FLANGE FUEL TANK ATTACK WELDED
16	RA2602T	1	PORTAGOMMA DIRITTO 1/8"M PG9 FORATO Ø6,1	STRAIGHT HOSE
17	RA19511	1	TUBO OTTONE Ø6x5 L.195 S.B.MINI	PIPE BRASS
18	RA26021	1	PORTAGOMMA DIRITTO 1/8"M PG9	STRAIGHT HOSE
19	VI71216	2	VITE TC TC M4x10 INOX UNI7687 DIN7985A	SCREW
20	VI73184	2	RONDELLA DENTELLATA INOX ESTERNA Ø4	WASHER
21	PE2245	1	INTER. REED GALLEGGIANTE VERTICALE	REED SWITCH FLOAT VERTICAL+R[54]C
22	SB7D00CV1	1	SERBATOIO DETERGENTE STEAM SKY COMPL	CLEANER TANK
22A	SB7D000V1	1	SERBATOIO DETERGENTE STEAM SKY	CLEANER TANK
23	FL12512V1	1	FILTRO ISPEZIONABILE 307µm 1/2"M	FILTER INSPECTABLE
24	CA72070	1	STAFFA FILTRO ISPEZIONABILE STEAM SKY	BRACKET FILTER INSPECTABLE
25	VI73184	2	RONDELLA DENTELLATA INOX ESTERNA Ø4	WASHER
26	VI72125	2	DADO M4 INOX UNI5588 ISO4032 UNI EN 2403	NUT
27	VI7137	2	VITE AUTOFIL. Ni TC TC 3,5x13	SCREW
28	PP27013	1	RACCORDO GOMITO 1/2"M - 1/2"F PLASTICA	ELBOW FITTING
29	PP27003	1	PORTAGOMMA DIRITTO 1/2"F PG10 PLASTICA	STRAIGHT HOSE
30	PE23277	1	GALLEG. ORIZ. BASSO SERB.DET SW1 S/SKY	REED SWITCH FLOAT
31	SB7W00CV1	1	SERBATOIO ACQUA STEAM SKY COMPL	WATER TANK
31A	SB7W000V1	1	SERBATOIO ACQUA STEAM SKY	WATER TANK
32	FL12512V1	1	FILTRO ISPEZIONABILE 307µm 1/2"M	FILTER INSPECTABLE
33	CA72070	1	STAFFA FILTRO ISPEZIONABILE STEAM SKY	BRACKET FILTER INSPECTABLE
34	VI73184	2	RONDELLA DENTELLATA INOX ESTERNA Ø4	WASHER
35	VI72125	2	DADO M4 INOX UNI5588 ISO4032 UNI EN 2403	NUT
36	VI7137	2	VITE AUTOFIL. Ni TC TC 3,5x13	SCREW
37	PP27013	1	RACCORDO GOMITO 1/2"M - 1/2"F PLASTICA	ELBOW FITTING
38	PP27003	1	PORTAGOMMA DIRITTO 1/2"F PG10 PLASTICA	STRAIGHT HOSE
39	RA31052	1	RACCORDO GOMITO 1/8"M I/R - 8x6	ELBOW FITTING
40	PE23276	1	GALLEG. ORIZ. BASSO SERB.ACQUA SW1 S/SKY	REED SWITCH FLOAT
40A	PE23278	1	GALLEG. ORIZ. ALTO SERB.ACQUA SW4 S/SKY	REED SWITCH FLOAT
41	Q701010V2	1	QUADRO ELETTRICO STEAM SKY 40kW 230V	ELECTRICAL PANEL
42	QS72000V2	1	QUADRO ELETTRICO STEAM SKY SALDATO	ELECTRICAL PANEL WELDED
43	PE22751	1	INTERRUTTORE TRIPOLARE 20A 690V Ith25A	THREE POLE SWITCH
44	VI71622	4	VITE TSP TC ZN 5x12 PLASTICA	SCREW
45	VI81004	4	VITE M6x25 BUTTON HEAD INOX ISO7380	SCREW
46	VI73036	4	RONDELLA DENTELLATA INOX M6 DIN6798A	WASHER
47	85140900	4	RONDELLA PIANA INOX 6x18 UNI6593	WASHER
48	LM72Q10	4	BOCCOLA ISOLAMENTO ELETTRICO STEAM SKY	BUSH ELECTRICAL INSULATION
49	PE05022	1	SUPPORTO ISOLANTE TRASFORMATORE 170x110	SUPPORT INSULATION TRANSFORMER
50	TRF5022	1	TRASFORMATORE 500VA 230V/230V	TRANSFORMER
51	85140900	4	RONDELLA PIANA INOX 6x18 UNI6593	WASHER
52	VI73036	4	RONDELLA DENTELLATA INOX M6 DIN6798A	WASHER
53	VI76012	4	DADO M6 INOX UNI5588 ISO4032 UNI EN24032	NUT
54	PE442F9	1	CASSETTA IP56 300x220x120 STEAM SKY	BOX IP66/67 240x190x90 STEAM SKY
55	CA72Q20	1	LAMIERA FONDO QUADRO STEAM SKY	SMALL PLATE BOTTOM
55A	VI7130	2	VITE AUT. TC TC 3,5x9,5 Ni	SCREW 3,5x9,5
56	PR2M50B	2	PRESSACAVO EPDM M50 RAL 7035	CABLE PRESS
57	RA3081	mt.0,27	SUPPORTO BARRA-DIN 35x15mm	SUPPORT
58	VI7312	2	RONDELLA GREMBIULINA 4x16 ZN	WASHER
59	VI7022	2	RIVETTO ACCIAIO INOX Ø4x12 UNI9200A	RIVET STEEL
60	PE20005	6	MORSETTO 4mmq D4/6.T3.P	ELECTRICAL TERMINAL 4mmq D4/6.T3.P
61	PE23442	1	RELAY MODULARE 6mm EMR 12VDC-250V 6A	RELAY MODULAR 6mm EMR 12VDC-250V 6A
62	PE20045	1	SEPARATORE DI CIRCUITO X MORSETTO M10/10	TRAP CIRCUIT X ELECTRICAL TERMINAL
63A	PE20654	2	MORSETTO PORTAFUSIBILE A LAMA 4mmq	TERMINAL FUSE BLADE
63B	PE20655	2	PIASTRINA TERMINALE X MORSETTO DSFA.4/GR	SEPARATOR FOR TERMINAL
63C	PE12534	2	FUSIBILE 5x20 IN STEATITE 250VAC GT 4A	FUSE 5X20 250VAC GT 4A
63D	PE20656	2	CARTUCCIA PORTAFUSIBILE X MORSET DSFA.4	CARTRIDGE FUSE
64	PE64C32	1	SCHEDA S.B.MINI UNITA' POTENZA COMPLETA	UNIT BO93ARD FULL POWER
65	PE2033S	1	FLAT CABLE 20P STEAM SKY L.250	FLAT CABLE 20P STEAM SKY L.250
66	VI7137	4	VITE AUTOFIL. Ni TC TC 3,5x13	SCREW
67	PE20467	1	POMPA VOLUMETRICA 100L/H 15bar	VOLUMETRIC PUMP
68	PE21654	1	MOTORE A INDUZIONE 165W 220/230V 50/60Hz	ENGINE INDUCTION
69	VI81004	4	VITE M6x25 BUTTON HEAD INOX ISO7380	SCREW
70	VI73036	4	RONDELLA DENTELLATA M6 INOX DIN6798A	WASHER

71	85140900	4	RONDELLA GREMBIALINA M6 (6.4x18) INOX	WASHER
76	RA31607	1	RACCORDO GOMITO 3/8"M CIL - 3/8"F CIL	ELBOW FITTING
77	RO69129	1	PORTAGOMMA DIRITTO 3/8"M PG9	STRAIGHT HOSE
78	RA33611	mt. 0,19	TUBO TRASPARENTE RETINATO 14x8	TRASPARENT TUBE
79	PG5200	2	FASCETTA CLIC 14-16/6 (135-VERDE)	CLAMP
80	RA31805	1	RACCORDO DIRITTO 3/8"M - 8x6	STRAIGHT
81	RA3201	mt. 0,56	TUBO TEFLON Ø6x8	TEFLON TUBE
82	PG53831	mt. 0,51	CALZA VETRO SILICONE ROSSO Øi 9mm	SILICON GLASS SHIELD RED Øi 9mm
83	PE20477	1	POMPA VOLUMETRICA 50L/H 10bar	VOLUMETRIC PUMP
84	PE21654	1	MOTORE A INDUZIONE 165W 220/230V 50/60Hz	ENGINE INDUCTION
85	VI81004	4	VITE M6x25 BUTTON HEAD INOX ISO7380	SCREW
86	VI73036	4	RONDELLA DENTELLATA INOX M6 DIN6798A	WASHER
87	85140900	4	RONDELLA GREMBIALINA M6 (6.4x18) INOX	WASHER
92	RA31607	2	RACCORDO GOMITO 3/8"M CIL - 3/8"F CIL	ELBOW FITTING
93	RO69129	1	PORTAGOMMA DIRITTO 3/8"M PG9	STRAIGHT HOSE
94	RA33611	mt. 0,33	TUBO TRASPARENTE RETINATO 14x8	TRASPARENT TUBE
95	PG5200	2	FASCETTA CLIC 14-16/6 (135-VERDE)	CLAMP
96	RG55K21	1	RACCORDO GOMITO 3/8"M OGIVA Ø10	ELBOW FITTING
97	RA33107	mt. 0,56	TUBO TEFLON Ø6x10	TEFLON TUBE
98	PG53807	mt. 0,51	CALZA VETRO SILICONE ROSSO Øi 10mm	SILICON GLASS SHIELD RED Øi 10mm
99	PE70000V1	1	CABLAGGIO STEAM SKY	CABLE
100	PE64S15	1	SCHEDA STEAM SKY UNITA' CONTROLLO COMPLETA	UNIT CONTROL BOARD FULL
101	VI71312	4	VITE TCBEI M3x12 ISO7380 INOX	SCREW
102	CA7202S	1	STAFFA PROTEZ ELETTR QUADRO S/SKY SALD	BRACKET ELECTRONIC PROTECTION FRAMEWORK
103	VI71619	4	VITE TC TC M4x16 INOX UNI7687 DIN7985A	SCREW
104	VI73036	4	RONDELLA DENTELLATA INOX M6 DIN6798A	WASHER
105	VI76012	4	DADO M6 INOX AUTOBLOCCANTE UNI 7473	NUT
106	CA72030V1	1	STAFFA ATTACCHI STEAM SKY	BRACKET PLUG IN
107	EW18482	1	ELETTROVALVOLA IN 3/4"M OUT 2x J/G 8 220/240V	SOLENOID
108	VI71216	2	VITE TC TC M4x10 INOX UNI7687 DIN7985A	SCREW
109	PP18482	1	COPERCHIO ISOLANTE MYLAR SU RETE IDRICA	MYLAR COVER INSULATION ON WATER MAINS
110	RA33008	mt. 0,33	TUBO POLIURETANO BLU Ø8x6	POLYURETHANE TUBE BLU
110A	PP26005	1	PORTAGOMMA GOMITO PG7 - J/G Ø8x6	HOSE ELBOW
111	PP28003	1	RACCORDO DIRITTO ANTIREFLUSSO I/R Ø8	STRAIGHT ANTIREFLUX
112	RA33008	mt. 0,05	TUBO POLIURETANO BLU Ø8x6	POLYURETHANE TUBE BLU
113	RA33008	mt. 0,54	TUBO POLIURETANO BLU Ø8x6	POLYURETHANE TUBE BLU
113A	PP28003	1	RACCORDO DIRITTO ANTIREFLUSSO I/R Ø8	STRAIGHT ANTIREFLUX
113B	RA33008	mt. 0,05	TUBO POLIURETANO BLU Ø8x6	POLYURETHANE TUBE BLU
114	INCA201	1	STAFFA FISSAGGIO RACCORDO SCARICO	BRACKET FITTING DISCHARGE
115	VI7022	2	RIVETTO ACCIAIO INOX Ø4x12 UNI9200A	RIVET STEEL
116	PP64411	1	ATTACCO A BAIONETTA 1/2"F	BAYONET
117	VI71924	2	VITE AUTOF. NIC. 2,9x6,5 UNI6954 DIN7981	SCREW
118	RA31812	1	RIDUZIONE 1/2"M - 1/8"F OTTONE	REDUCTION
119	RA31058	1	RACCORDO GOMITO 1/8"M GIREVOLE I/R - 8x6	ELBOW FITTING
120	RA33008	mt. 0,76	TUBO POLIURETANO BLU Ø8x6	POLYURETHANE TUBE BLU
121	PE30142	1	CUSTODIA DA PANNELLO C/1 LEVA METALLO HARTING	CONNECTOR COVER W/ SNAP
122	PE30015	1	TELAIO INCERNIERATO 3 MODULI X CUSTODIA HARTING	FRAME FOR 3 CONNECTORS
123	PE30035	1	FRUTTO 1 MOD X CONTATTO F 12P HARTING	CONNECTOR FOR 12P CONTACT
124	PP00195	1	BLOCCHETTO ISOLAMENTO ALTA TEMP X UGELLO MASCHIO	BLOCK INSULATION HIGH TEMP X MALE NOZZLE
125	7200124V1	1	UGELLO MASCHIO 1/8"F CON SEDE OR	MALE NOZZLE
126	PG51092	1	OR 9x2 FFPM 75 SH PFX8050	OR
127	VI7339	1	RONDELLA DI SPESSORAMENTO 10x16x0,5 INOX	WASHER
128	RA30724	1	RIDUZIONE 1/8"M - 1/42f	REDUCTION
129	RG55K11	1	RACCORDO GOMITO 1/4"M (OGIVA) 10x6 CH19	ELBOW FITTING
130	VI71619	4	VITE TC TC M4x16 INOX UNI7687 DIN7985A	SCREW
131	RA33107	mt. 0,53	TUBO TEFLON Ø6x10	TEFLON TUBE
132	PG53807	mt. 0,48	CALZA VETRO SILICONE ROSSO Øi 10mm	SILICON GLASS SHIELD RED Øi 10mm
133	PE30142	1	CUSTODIA DA PANNELLO C/1 LEVA METALLO HARTING	CONNECTOR COVER W/ SNAP
134	PE30015	1	TELAIO INCERNIERATO 3 MODULI X CUSTODIA HARTING	FRAME FOR 3 CONNECTORS
135	PE30035	1	FRUTTO 1 MOD X CONTATTO F 12P HARTING	CONNECTOR FOR 12P CONTACT
136	PP00195	1	BLOCCHETTO ISOLAMENTO ALTA TEMP X UGELLO MASCHIO	BLOCK INSULATION HIGH TEMP X MALE NOZZLE
137	7200124V1	1	UGELLO MASCHIO 1/8"F CON SEDE OR	MALE NOZZLE
138	PG51092	1	OR 9x2 FFPM 75 SH PFX8050	OR
139	VI7339	1	RONDELLA DI SPESSORAMENTO 10x16x0,5 INOX	WASHER
140	RA30724	1	RIDUZIONE 1/8"M - 1/42f	REDUCTION
141	RA32018	1	RACCORDO GOMITO 1/4"M (OGIVA) 10x6 CH17	ELBOW FITTING
142	VI71619	4	VITE TC TC M4x16 INOX UNI7687 DIN7985A	SCREW
143	RA33107	mt. 0,84	TUBO TEFLON Ø6x10	TEFLON TUBE
144	PG53807	mt. 0,79	CALZA VETRO SILICONE ROSSO Øi 10mm	SILICON GLASS SHIELD RED Øi 10mm
145	85120230	2	VITE M6x16 BUTTON HEAD INOX ISO7380	SCREW
146	CA72060	2	STAFFA SUPPORTO COLLETTORI STEAM SKY	BRACKET SUPPORT COLLECTORS
147	85140900	4	RONDELLA GREMBIALINA M6 (6.4x18) INOX	WASHER
148	VI73036	4	RONDELLA DENTELLATA M6 INOX DIN6798A	WASHER
149	VI81004	4	VITE M6x25 BUTTON HEAD INOX ISO7380	SCREW
150	CV72WD0V1	1	COLLETTORE VAPORE STEAM SKY	STEAM COLLECTOR
151	RA20013	1	COLLETTORE 90x25x20 2x1/4"F 1/4"F PASSANTE	COLLECTOR
152	RA31875	1	RACCORDO DIRITTO 1/4"M - 1/4"M	STRAIGHT
153	PE23045	1	ELETTROVALVOLA SERIE99 PTFE DN 4,0 20VA 1/4"F x 1/4"F	SOLENOID
154	RA32018	1	RACCORDO GOMITO 1/4"M (OGIVA) 10x6 CH17	ELBOW FITTING
155	RA31875	2	RACCORDO DIRITTO 1/4"M - 1/4"M	STRAIGHT
156	RA31911	2	GIUNTO 3 PEZZI DIRITTO 1/4"M - 1/4"F	JOINT 3 PIECE RIGHT
157	PE23045	1	ELETT.SERIE99 PTFE DN 4,0 20VA 1/4Fx1/4F	SOLENOID
158	PE23045	1	ELETT.SERIE99 PTFE DN 4,0 20VA 1/4Fx1/4F	SOLENOID

159	RA32018	1	RACCORDO GOMITO 1/4"M (OGIVA) 10x6 CH17	ELBOW FITTING
160	RA31911	2	GIUNTO 3 PEZZI DIRITTO 1/4"M - 1/4"F	JOINT 3 PIECE RIGHT
161	RA31875	2	RACCORDO DIRITTO 1/4"M - 1/4"M	STRAIGHT
162	RA20013	1	COLLETTORE 90x25x20 2x1/4"F 1/4"F PASSANTE	COLLECTOR
163	RA31875	1	RACCORDO DIRITTO 1/4"M - 1/4"M	STRAIGHT
164	PE23014	1	ELETTROVALVOLA SERIE99 PTFE DN 1,5 1/4"F x 1/4"F	SOLENOID
165	RA31875	1	RACCORDO DIRITTO 1/4"M - 1/4"M	STRAIGHT
166	RL03531	1	COLLETTORE 35x25x20 1x1/4"F 1/4"F PASSANTE	COLLECTOR
167	PE24216	1	PRESSOSTATO 16A 250V + C.BT 9-15bar VDE	PRESSURE SWITCH
168	RA32018	1	RACCORDO GOMITO 1/4"M (OGIVA) 10x6 CH17	ELBOW FITTING
169	RA31044	1	RACCORDO GOMITO 1/4"M - 1/4"F	ELBOW FITTING
170	RA34094	1	VALVOLA N/RITORNO MF MOLLA DEBOLE 1/4	VALVE NO RETURN
171	RA31474	1	RACCORDO GOMITO 1/4"M - 1/4"M	ELBOW FITTING
172	RL03531	1	COLLETTORE 35x25x20 1x1/4"F 1/4"F PASSANTE	COLLECTOR
173	RG55K11	1	RACCORDO GOMITO 1/4"M (OGIVA) 10x6 CH19	ELBOW FITTING
174	RA31474	1	RACCORDO GOMITO 1/4"M - 1/4"M	ELBOW FITTING
175	RA34088	1	VALVOLA UNIDIREZIONALE DA 1/4"M MOLLA DURA	UNIDIRECTIONAL VALVE
176	RA32018	1	RACCORDO GOMITO 1/4"M (OGIVA) 10x6 CH17	ELBOW FITTING
177	VI71695	4	VITE TC TC M4x35 ZN UNI7687 DIN7985	SCREW
178	VI7318	4	RONDELLA DENTELLATA EST M4 ZN	WASHER
179	PP0005	1	TAPPO VANO ELETTRICO IDRAULICO	STOPPER
180	IS72000	1	ISOLANTE SERBATOI STEAM SKY 400x400	INSULATION TANK
181	09W7100	1	CALDAIA COMPLETA STEAM SKY 40kW H20 10b	BOILER COMPLETE
182	99W7100	1	CALDAIA STEAM SKY 40kW	BOILER
183	IS72C20	1	ISOLANTE CAMERA COMBUSTIONE Ø280 Sp.18	INSULATION BURNING ROOM
184	LM72C0S	1	CHIUSURA INFERIORE CALDAIA SALDATA + FORATA	LAST BOTTOM BOILER WELDED + HOLE
185	LM72C1F	1	INVOLUCRO ESTERNO CALDAIA FORATO	EXTERNAL CASE BOILER HOLE
186	LM72C20	1	CAMPANA BRUCIATORE CALDAIA	BELL BURNER BOILER
187	LM72C30	1	COPERTURA SUPERIORE CALDAIA	TOP COVER BOILER
188	LM72C40	1	ACCENDITORE CALDAIA	LUGHTER BOILER
189	85120230	4	VITI M6x16 BUTTON HEAD INOX ISO7380	SCREW M6X16
190	UG72G08	1	UGELLO GASOLIO 0,85 gal/h T95/2	NOZZLE FUEL
190A	PE70C50	1	ELETTRODI PER ACCENSIONE	ELECTRODE ON POWER ON
191	PE70C40	1	FOTORESISTENZA BRAHMA FC7	PHOTORESISTOR BRAHMA FC7
192	PE70C00	1	VENTILATORE 150W 230V 50Hz	FAN 150W 230V 50Hz
193	PE70C05	1	MOTORE 150W 230V 50/60HZ	MOTOR 150W 230V 50/60HZ
194	PE70C10	1	POMPA GASOLIO COMPLETA STEAM SKY	COMPLETE FUEL PUMP
195	TU72C00	1	TUBO ALLUMINIO GASOLIO + RACCORDI	TUBE ALUMINIUM FUEL + FITTING
196	PE70C35	1	STAFFA TRASFORMATORE SU CALDAIA	BRACKET TRANSFORMER ON BOILER
196A	VI7157	2	VITE 4.8 METALLO TC TC M4x16 ZN	SCREW M4X16 ZN
197	PE70C20	1	TRASFORMATORE 60VA 230V/15KV	TRANSFORMER
198	PE70C30	1	CAVI ALTA TENSIONE	HIGGH VOLTAGE CABLE
199	RA31877	1	RIDUZIONE 1/2"M - 1/4"F OTTONE	REDUCTION
200	RA31473	1	CURVA 90° 1/4"M - 1/4"M ANTICALCARE	CURVE 90°
201	RA34088	1	VALVOLA UNIDIREZIONALE DA 1/4"M MOLLA DURA	UNIDIRECTIONAL VALVE
202	RA31875	1	RACCORDO DIRITTO 1/4"M - 1/4"M	STRAIGHT
203	PE23045	1	ELETTR. SERIE99 PTFE DN 4,0 20VA 1/4" x 1/4"F	SOLENOID
204	RA31804	1	RACCORDO DIRITTO 1/4"M - 8x6 CALZ	STRAIGHT
205	RG55K31	1	RACCORDO GOMITO 1/2"M OGIVA Ø10	ELBOW FITTING
206	RA31877	2	RIDUZIONE 1/2"M - 1/4"F OTTONE	REDUCTION
207	RA31911	2	GIUNTO 3 PEZZI DIRITTO 1/4"M - 1/4"F	JOINT 3 PIECE RIGHT
208	TUB0S10	1	TUBO Ø60 sp.1,5 L.156 1"F - 2x 1/4"M - 3/8"F	TUBE Ø60
209	RA3163	1	TAPPO DRENAGGIO 3/8"M FILETTATO CIL C/OR	DRAIN PLUG 3/8" THREAD W/OR
210	TG10K15	1	TAPPO OTTONE C/SONDA 104mm + SIC. 15b KALREZ	BRASS CAP LVL CONTACT FLOAT
211	RA34067	1	VALVOLA SIC 97/23CE > 50 15bar 1/4"M KALREZ	SAFETY VALVE
212	PG51033	1	GUARNIZIONE TEFLON Ø33,2x40x2	TEFLON GASKET ø33,2x40x2
213	RO55K33	1	MAGGIORAZIONE 1/2"M - 1/2"F	INCREASE
214	RO63K03	1	RACCORDO A T 1/2"M - 1/2"F - 1/2"F	FITTING T
215	RA31877	1	RIDUZIONE 1/2"M - 1/4"F OTTONE	REDUCTION
216	RA34011	1	VALVOLA SIC. D7/C 12bar DN 1/4"M x 1/2"M	SAFETY VALVE
217	ES32056	1	RACCORDO GOMITO 1/2"F - 1/2"F	ELBOW FITTING
218	RA30211	2	PORTAGOMMA DIRITTO 1/2"M Ø20	STRAIGHT
219	RG55K31	1	RACCORDO GOMITO 1/2"M OGIVA Ø10	ELBOW FITTING
220	PE2344	1	TERMOSTATO 275°C RIPRISTINO	THERMOSTAT 275°
221	VI7103	1	VITE KF 3,5 x 6,5 - 6 x 1/4 Ni UNI6954 DIN7981	SCREW
222	VI7318	1	RONDELLA DENTELLATA EST M4 ZN	WASHER
223	PG53864	mt. 0,15	CALZA VETRO SILICONE ROSSO Øi 16mm	SILICON GLASS SHIELD RED Øi 16mm
224	RA26014	1	PORTAGOMMA DIRITTO 1/4"M PG9	STRAIGHT
225	RA31474	1	RACCORDO GOMITO 1/4"M - 1/4"M	ELBOW FITTING
226	FLG5011	1	FILTRO PER GASOLIO 1/4"F - 1/4"F 100µm	FUEL FILTER
227	RA31044	1	RACCORDO GOMITO 1/4"M - 1/4"F	ELBOW FITTING
228	RA26014	1	PORTAGOMMA DIRITTO 1/4"M PG9	STRAIGHT
229	RO57R04	1	TAPPO DRENAGGIO 3/4"M FILETT. CIL. C/OR	DRAIN PLUG 3/4" THREAD W/OR
230	VI7320	3	RONDELLA GREMBIALINA 6x24 ZN	WASHER
231	VI7303	3	RONDELLA DENTELLATA M6 ZN	WASHER
232	VI7201	3	DADO M6 ZN UNI5588 ISO4032 UNI EN 24032	NUT
232A	PE20522	1	TERMORESISTENZA PT1000 Ø6x100 L.200	THERMORESISTANCE PT1000 L.200 COMPL.
233	TR72C00	1	TUBO RAME USCITA VAPORE STEAM SKY L.1480	BRASS TUBE
234	PG53807	mt. 1,43	CALZA VETRO SILICONE ROSSO Øi 10mm	SILICON GLASS SHIELD RED Øi 10mm
235	TR72C10	1	TUBO RAME USCITA ACQUA STEAM SKY L.1300	BRASS TUBE
236	PG53807	mt. 1,25	CALZA VETRO SILICONE ROSSO Øi 10mm	SILICON GLASS SHIELD RED Øi 10mm
237	PG50011	mt. 0,70	TUBO PER ARIA-ACQUA 20bar 19x30	HOSE FOR AIR-WATER
238	PG52011	1	FASCETTA METALLICA 19-30	CLAMP

239	TN0815N	mt. 0,70	TUBO PARKER CARBONPRESS N/L 10b Ø8x15	TUBE PARKER CARBONPRESS
240	PG5200	2	FASCETTA CLIC 14-16/6 (135 - VERDE)	CLAMP
241	TN0815N	mt. 0,65	TUBO PARKER CARBONPRESS N/L 10b Ø8x15	TUBE PARKER CARBONPRESS
242	PG5200	2	FASCETTA CLIC 14-16/6 (135 - VERDE)	CLAMP
243	AL72080	1	GRUPPO ADDOLCITORE STEAM SKY	SOFTENER GROUP
244	FL00109	1	BOMBOLA 7x17 BLU CON BASE 3/4"F CIL	BLU BOTTLE WITH BASE
244A	FL001T9	1	ADDATTATORE BOMB 7x17 2x3/4F CIL DIFF	ADAPTER BOTTLE
244B	PG51855	1	OR 85x5 NBR NERO	OR 85x5 NBR BLACK
245	FL00800	1	RESINA CATIONICA ADDOLCIMENTO ACQUE	RESIN CATION SOFTENING WATER
246	RO54142	1	RIDUZIONE 3/4"M - 3/8"F	REDUCTION
247	RA31607	1	RACCORDO GOMITO 3/8"M CIL - 3/8"F CIL	ELBOW FITTING
248	RO63K02	1	RACCORDO A T 3/8"M - 3/8"F - 3/8"F	FITTING T
249	RO55K24	1	MAGGIORAZIONE 3/8"M - 3/4"F	INCREASE
250	PE23370	1	ELETTROVALVOLA IN 3/4"M OUT J/G 8 220/240V	SOLENOID
251	PP26005	1	PORTAGOMMA GOMITO PG7 - J/G Ø8x6	HOSE ELBOW
252	RA31607	1	RACCORDO GOMITO 3/8"M CIL - 3/8"F CIL	ELBOW FITTING
253	RO52K12	1	RACCORDO DIRITTO 1/4"M - 3/8"M CONICO	STRAIGHT
254	RA34088	1	VALVOLA UNIDIREZIONALE DA 1/4"M MOLLA DURA	UNIDIRECTIONAL VALVE
255	RA31804	1	RACCORDO DIRITTO 1/4"M - 8x6 CALZ	STRAIGTH
256	RO54141	1	RIDUZIONE 3/4"M - 1/4"F	REDUCTION
257	RO73111	1	PROLUNGA 1/4"M - 1/4"F L.51	EXTENSION CORD
258	RA31037	1	RACCORDO A T 1/4"F - 1/4"F - 1/4"M	FITTING T
259	RA31875	1	RACCORDO DIRITTO 1/4"M - 1/4"M	STRAIGHT
260	RA34088	1	VALVOLA UNIDIREZIONALE DA 1/4"M MOLLA DURA	UNIDIRECTIONAL VALVE
261	RA31804	1	RACCORDO DIRITTO 1/4"M - 8x6 CALZ	STRAIGHT
262	RA31064	1	RACCORDO GOMITO 1/4"M - 8x6 A CALZ	ELBOW FITTING
263	CA72080	2	FASCIA FISSAGGIO ADDOLCITORE STEAM SKY	BAND FIXING SOFTENER
264	CA72051	2	FASCIA ALLOGGIAMENTO ADDOLCITORE STEAM SKY	BAND HOUSING SOFTENER
265	PG00083	mt. 2,08	PROFILO PER SPIGOLI 8,5x5,5	PROFILE FOR EDGES
266	85120230	4	VITE M6x16 BUTTON HEAD INOX ISO7380	SCREW
267	VI71667	2	VITE M6x60 BUTTON HEAD INOX ISO7380	SCREW
268	RA3201	mt. 0,43	TUBO TEFLON Ø6x8	TEFLON TUBE
269	PG53831	mt. 0,38	CALZA VETRO SILICONE ROSSO Øi 9mm	SILICON GLASS SHIELD RED Øi 9mm
270	RA33008	mt. 1,10	TUBO POLIURETANO BLU Ø8x6	POLYURETHANE TUBE BLU
271	PE70010	1	CAVO ALIMENTAZIONE	POWER CORD
272	PE25305	mt. 9,30	CAVO NEOPRENE H07NR-F 2x1	NEOPREEN CABLE
273	PE2024	1	SPINA VOL. 2P+T 16A 220V 50Hz IP67	PLUG
274	CA7204T	1	STAFFA SUPPORTO SERBATOIO SALE STEAM SKY	BRACKET SUPPORT TANK SALT
275	85120230	3	VITE M6x16 BUTTON HEAD INOX ISO7380	SCREW
276	VI73036	3	RONDELLA DENTELLATA M6 INOX	WASHER
277	LM72S0TV1	1	VASCHETTA SERBATOIO SALE STEAM SKY	TANK FOR TANK SALT
278	VI70190	3	PIASTRINA PER AUTOFILETTANTE sp. 0,5-1 Ø4,8	PLATE FOR TAPPING
279	SB7S00CV2	1	SERBATOIO SALE STEAM SKY COMPLETO	TANK SALT COMPLETE
279A	PG72643	2	GUARNIZIONE MOUSSE NEOPRENE Ø89	GASKET
280	SB7S00F	1	SERBATOIO SALE STEAM SKY FORATO	TANK SALT
281	NO CODICE	1	FILTRO - E' COMPRESO NEL SERBATOIO SALE	FILTER - INCLUDED IN TANK SALT
281A	TA71S00	1	TAPPO SERBATOIO SALE	TANK CAP SALT
282	PG72000	1	GUARNIZIONE Ø58 Sp. 5mm	GASKET
282A	RA30704	1	RIDUZIONE 1/4"M - 1/8"F	REDUCTION
283	RA3187T	1	RACCORDO DIRITTO 1/8"M - 1/8"M FORO Ø6,1	STRAIGHT
284	RA1951TV1	1	TUBO OTTONE Ø6x5 L.165 STEAM SKY	PIPE BRASS
285	FR70W40	1	RIDUTTORE DI PRESSIONE H2O 0-4bar 1/8"F	REDUCING PRESSURE H2O
286	MN60440	1	MANOMETRO Ø40 0-4bar 1/8"M	MANOMETER
287	RA31068	1	RACCORDO DIRITTO 1/8"M I/R C/OR - 8x6	STRAIGHT
288	RA72F00	1	RACCORDO OTTONE PORTA FILTRO STEAM SKY	FITTING BRASS HOLDER
289	PG23275	1	GOMMINO ESPANSIONE NBR GASOLIO	RUBBER EXPANSION NBR FUEL
290	PP00018	1	RONDELLA M16 PLASTICA	WASHER
291	PP00028	1	DADO M16 PLASTICA	NUT
292	RA31068	1	RACCORDO DIRITTO 1/8"M I/R C/OR - 8x6	STRAIGHT
293	VI71614	3	VITE TSP M4x12 INOX UNI 7688 DIN 965	SCREW
294	RA33008	mt. 1,05	TUBO POLIURETANO BLU Ø8x6	POLYURETHANE TUBE BLU
295	CA72M0C	1	MANTELLO STEAM SKY COMPLETO	CENTRAL PANEL COMPLETE
299	85120220	7	VITE M6x10 BUTTON HEAD INOX ISO7380	SCREW
300	CR72020	1	MANIGLIA SPINTA STEAM SKY	HANDLE PUSH
301	PP00013	2	MEZZA MANIGLIA AVVOLGICAVO PER CARRELLI	HALF HANDLE REELS FOR TRUCKS
302	VI7190	2	VITE TBEI M6x55 BUTTON HEAD ZN	SCREW
303	VI76005	2	VITE M6x35 BUTTON HEAD INOX ISO7380	SCREW
304	CA19137	1	STAFFA AVVOLGI TUBI LINEA STEAM BOX	BRACKET RELLS
305	85120230	2	VITE M6x16 BUTTON HEAD INOX ISO7380	SCREW
306	VI73553	3	VITE AUTOFLI. 4,8x13 INOX UNI6954 DIN79	SCREW
307	TA7100C	3	TAPPO SERBATOI PLASTICA VENTILATO VALVOLA COMPLETO	STOPPER TANK PLASTIC
308	PP64511	1	ATTACCO A BAIONETTA CON PG19	BAYONET
309	VI90007	1	CHIAVE MASCHIO ESAGONALE 12mm (DA DOTAZIONE)	KEY MALE HEX
310	SL00020	1	CONFEZIONE SALE PER LAVASTOVIGLIE 2KG	SALT PACKAGING 2KG FOR DISHWASHER