TECNOVAP

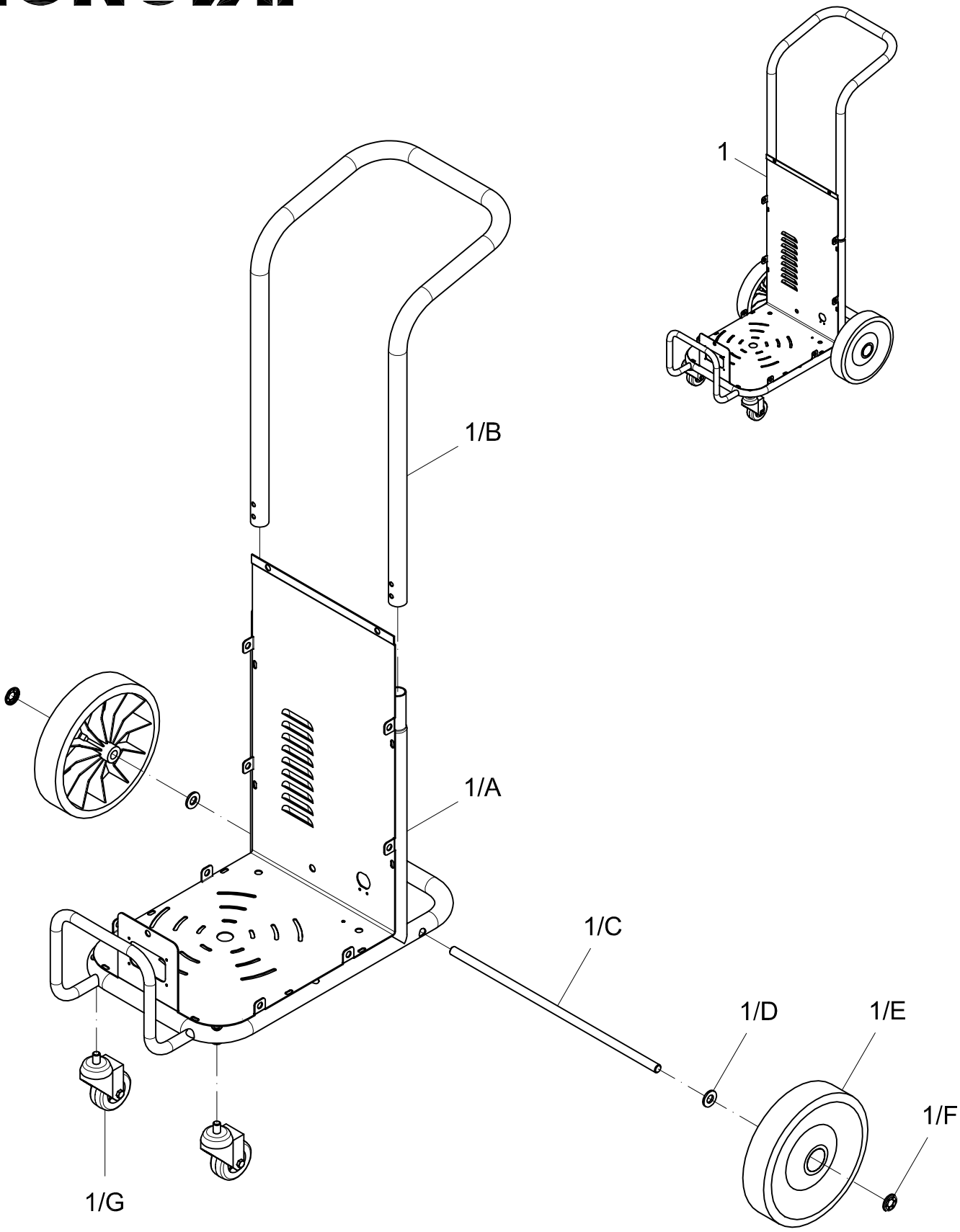

CARRELLO COMPLETO STEAM BOX MINI
cod. 3W06507 REV.0
U.T. 03/12/2007 Foglio 1/3

TECNOVAP

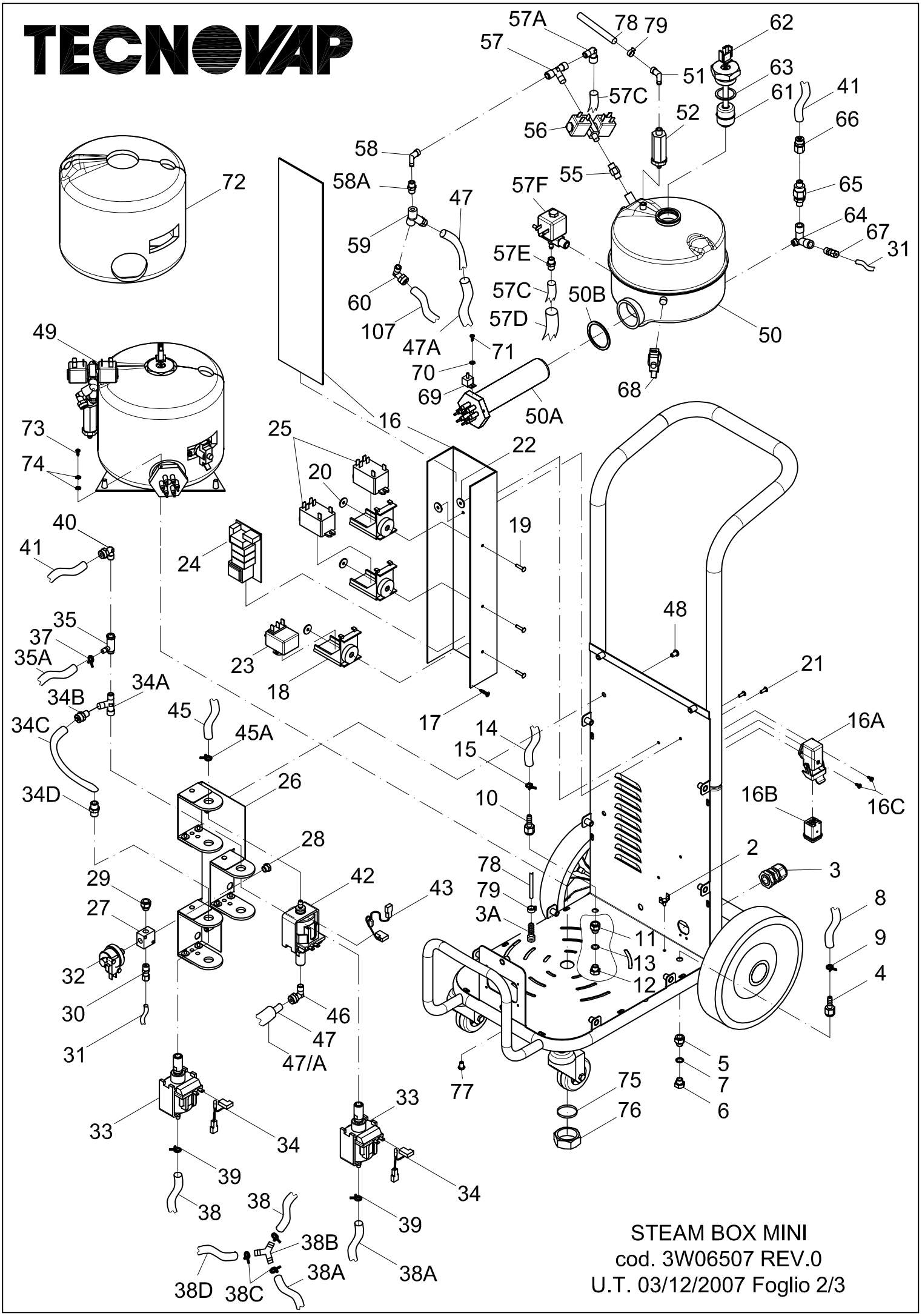

STEAM BOX MINI
cod. 3W06507 REV.0
U.T. 03/12/2007 Foglio 2/3

TECNOVAP

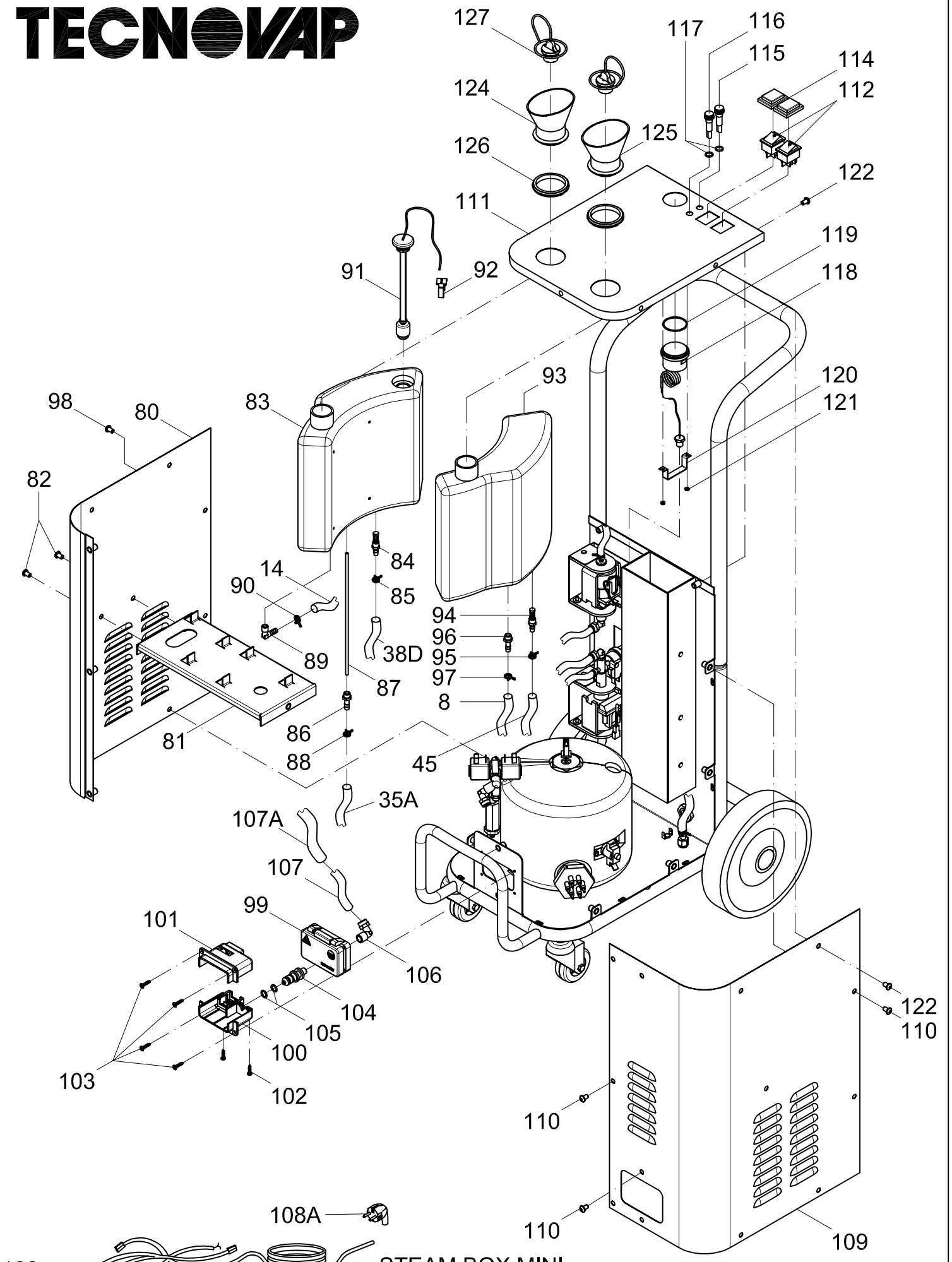

STEAM BOX MINI
cod. 3W06507 REV.0
U.T. 03/12/2007 Foglio 3/3

STEAM BOX MINI H2O 230V 3600W 50/60Hz cod. 3W06507 REV.0 03/12/07				
	CODICE	**Q.tà**	**DENOMINAZIONE**	**DENOMINATION**
1	CR40037	1	CARR. ARENA2 STEAM BOX MINI INOX	ARENA 2 TROLLEY
1/A	CR4003A	1	CARRELLO ARENA2 LATO RUOTE INOX	ARENA 2 TROLLEY - BASE
1/B	CR4003B	1	CARRELLO ARENA2 MANIGLIONE INOX	ARENA 2 TROLLEY - HANDLEBAR
1/C	CR4002C	1	PERNO L.395 FISSAGGIO RUOTE	WHEEL AXLE
1/D	VI73003	2	RONDELLA GREMBIULINA 12x24	WASHER 12X24
1/E	PG5416	2	RUOTA POSTERIORE ø200 STEAM TECH	REAR WHEEL Ø 200
1/F	PG5245	2	COLLARE ELASTICO FERMO RUOTA PER ø12	WHEEL LOCK
1/G	PG5404	2	RUOTA ø60 M10x15 GIREVOLE	WHEEL Ø 60 M10X15 - SWIVEL
2	PE30003	1	MORSETTIERA TERRA RAME ø3.8 L.8	COPPER CONNECTOR W/ RIVET
3	PE2361	1	PRESSACAVO PLASTICO PG16	CABLE PRESS PG16
3A	RA3020	1	PORTAGOMMA 7 X1/8 MASCHIO	TUBE COUPLER 7 1/8" M
4	RA3019	1	PORTAGOMMA 7 1/8" FEMMINA	TUBE COUPLER 7 1/8" F
5	RA3142	1	RACCORDO DIRITTO 1/8"Fx1/8"M	STRAIGHT VALVE 1/8"FX1/8"M
6	RA33152	1	TAPPO OTTONE 14 x L.15 x 1/8"	BRASS CAP FOR DRAIN TUBES
7	PG5106	1	OR 9.25x1.78 NBR GRIGIO RAL 7035	O-RING 9,25X1,78 NBR
8	PG5338	mt 0.35	TUBO GOMMA EPDM NERO ø7x10	EPDM HOSE Ø 7X10
9	PG5247	1	FASCETTA BIFILIARE 9.8x10.4	CLAMP 9,8X10,4
10	RA3019	1	PORTAGOMMA 7 1/8" FEMMINA	TUBE COUPLER 7 1/8" F
11	RA3142	1	RACCORDO DIRITTO 1/8"Fx1/8"M	STRAIGHT VALVE 1/8"FX1/8"M
12	RA33152	1	TAPPO OTTONE 14 x L.15 x 1/8"	BRASS CAP FOR DRAIN TUBES
13	PG5106	1	OR 9.25x1.78 NBR GRIGIO RAL 7035	O-RING 9,25X1,78 NBR
14	PG5338	mt 0.35	TUBO GOMMA EPDM NERO ø7x10	EPDM HOSE Ø 7X10
15	PG5247	1	FASCETTA BIFILIARE 9.8x10.4	CLAMP 9,8X10,4
16	PE27004V1	mt 0.4	CANALE PLASTICO 120x60 STEAM BOX MINI	PLASTIC DUCT 100X60
16A	PE21023	1	CUSTODIA PANNELLO 90° METALLO	CONNECTOR COVER 90°
16B	PE21053	1	FRUTTO PRESA 7P+T 400V 3~	SOCKET CONNECTOR 7P+T 400V 3~
16C	VI7152	2	VITE AUTOFIL. TC TC CROM. NERA 3,5X9,5	SCREW 3,5X9,5
17	VI7103	1	VITE KF NIC3,5X6,5-6X1/4 DIN7981 UNI6954	SCREW ZN 3,5X6,5
18	PG5034	3	STAFFA PORTA SCHEDA	SUPPORT MOUNT ELECTRONIC BOARD
19	VI7019	3	RIVETTO ALLUMINIO 4x16	ALUMINUM RIVET 4X16
20	VI7312	3	RONDELLA GREMBIULINA ZN 4x16	WASHER ZN 4X16
21	VI7044	4	RIVETTO TUTTO INOX ø4x10.2	ST. STEEL RIVET Ø 4X10,2
22	VI7312	4	RONDELLA GREMBIULINA ZN 4x16	WASHER ZN 4X16
23	PE2340	1	TERMOSTATO 240°C A BULBO	CONTROL THERMOSTAT 240°C
24	PE2347W	1	SCHEDA C.ELETTR.TVAP20+AUT PER EW WATER	ELECTRONIC BOARD
25	PE2010	2	RELAY 200/240V AC 20A	RELAY 200/240V AC 20A
26	CA17005V1	1	STAFFA FISSAGGIO POMPE STEAM BOX	SUPPORT MOUNT PUMP GROUP
27	RA3089	1	BLOCCHETTO 4 VIE PER PRESSOSTATO	4 WAY VALVE FOR PRESSURE SWITCH
28	RA3168	1	TAPPO PER RACCORDO 1/8"M	CAP FOR STRAIGHT VALVE 1/8"M
29	RA3142	1	RACCORDO DIRITTO 1/8"Fx1/8"M	STRAIGHT VALVE 1/8"FX1/8"M
30	RA3186	1	RACCORDO DIRITTO 1/8"M OGIVA ø4/2	STRAIGHT VALVE 1/8"M Ø4/2
31	RA3210	mt 0.26	TUBO TEFLON ø4x2	TEFLON TUBE Ø4X2
32	PE2411	1	PRESSOSTATO 16A 250V 4-9 bar	PRESSURE SWITCH 16A 250V 4-9 bar
33	PE2404	3	POMPA ET500 P - 1/8"F NBR 230V 50Hz	PUMP ET500P - 1/8"F NBR 230V 50Hz
34	PE2408	3	TERMOPROTETTORE 100°C COMPLETO	THERMAL PROTECTOR 100°C
34A	RA3185	1	RACCORDO A T 1/8"M X 1/8"F X 1/8"M	3 WAYS-VALVE 1/8"MFM
34B	RA3183	1	RACCORDO DIRITTO 6X8-1/8"M	STRAIGHT VALVE
34C	RA3201	mt 0.10	TUBO TEFLON ø6x8	TEFLON TUBE Ø 6X8
34D	RA3183	1	RACCORDO DIRITTO 6X8-1/8"M	STRAIGHT VALVE
35	PE2415	1	DEAREATORE PER POMPA	BLEEDER VALVE FOR PUMP
35A	PG5338	mt 0.38	TUBO GOMMA EPDM NERO ø7x10	HOSE Ø7X10
37	PG5247	2	FASCETTA BIFILIARE 9.8x10.4	CLAMP 9,8X10,4
38	PG5303	mt 0.145	TUBO GOMMA CALZATO NERO Ø5X10	HOSE Ø5X10
38A	PG5303	mt 0.15	TUBO GOMMA CALZATO NERO Ø5X10	HOSE Ø5X10
38B	RA31017	1	RACCORDO A Y PORTAGOMMA 7	3-WAYS VALVE
38C	PG5247	3	FASCETTA BIFILIARE 9.8x10.4	CLAMP 9,8X10,4
38D	PG5303	mt 0.35	TUBO GOMMA CALZATO NERO Ø5X10	HOSE Ø5X10
39	PG5247	2	FASCETTA BIFILIARE 9.8x10.4	CLAMP 9,8X10,4
40	RA3105	1	RACCORDO GOMITO 8x6 - 1/8"M	ELBOW VALVE 8X6 - 1/8"M
41	RA3201	mt 0.28	TUBO TEFLON ø6x8	TEFLON TUBE Ø 6X8
45	PG5338	mt 0.56	TUBO GOMMA EPDM NERO ø7x10	EPDM HOSE Ø 7X10
45A	PG5247	2	FASCETTA BIFILIARE 9.8x10.4	CLAMP 9,8X10,4
46	RA3104	1	RACCORDO GOMITO 6x4 - 1/8"M	ELBOW VALVE 6x4 - 1/8"M
47	RA3209	mt 0.49	TUBO TEFLON ø6x4	TEFLON TUBE Ø 6X4
47A	PG5338	mt 0.30	TUBO GOMMA EPDM NERO ø7x10	EPDM HOSE Ø 7X10
47C	PG5247	2	FASCETTA BIFILIARE 9.8x10.4	CLAMP 9,8X10,4
48	85120220	2	VITE TBEI ISO 7380 M6x10 INOX	SCREW TBEI M6X10 INOX

49	09W4007	1	CALDAIA COMP. S.BOX MINI 230V 3600W 5 L.	COMPL. BOILER 230V 3600W 4L.
50	9904000V2	1	CALDAIA C/RES S.BOX MINI 230V 3600W 5 L.	BOILER W/ ELEMENT 230V 3600W 4L.
50A	PE25226	1	RESISTENZA 230V 3600W 1" ¼	HEATING ELEMENT 230V 3600W
50B	PG5139	1	GUARNIZIONE ALLUMINIO Ø42x50x1.5	ALUMINUM GASKET Ø 42X50X1,5
51	RA30372	1	RACCORDO GOMITO 3/8M PG Ø7	ELBOW VALVE
52	RA3411	1	VALVOLA 1/8"M 7,5 bar PG Ø9 CATEGORIA I°	SAFETY VALVE 1/8"M 7,5 bar
55	RA3187	1	RACCORDO DIRITTO 1/8Mx1/8M F/CON.	STRAIGHT VALVE 1/8MX1/8M
56	PE2337	1	ELETTROV.6650+2 BOBINA 230V 1X1,5-1X2,5	SOLENOID VALVE 1X1-1X2,5
57	RA3132	1	RACCORDO A T 1/8"FX1/8"MX1/8"F	3-WAYS VALVE 1/8FMF
57A	RA3105	1	RACCORDO GOMITO 6X8 1/8"M	ELBOW VALVE 1/8"F - 1/8"M
57C	RA3201	mt 0.2	TUBO TEFLON Ø 6X8	HOSE 6X8
57D	PG5360	mt 0.15	TUBO EPDM 12X15 STEAM TECH	HOSE 12X15
57E	RA31834	1	RACCORDO DIRITTO 6X8-M6 FEMMINA	STRAIGHT VALVE 6X8-M6
57F	PE2333A	1	ELETTR.+BOBINA 6W 230/50 REG. FIL.M6	SOLENOID VALVE 230V 50Hz
58	RA3147	1	RACCORDO GOMITO 1/8"F - 1/8"M	ELBOW VALVE 1/8"F - 1/8"M
58A	RA3409	1	VALVOLA N/RITORNO MM MOLLA DEBOLE	NON RETURN VALVE - WEAK SPRING
59	RA30254	1	RACCORDO MISC. 1/8"F x 1/8"F 6x4	Y-VALVE 1/8"FX1/8"F 6X4
60	RA3105	1	RACCORDO GOMITO 8x6 - 1/8"M	ELBOW VALVE 8X6 - 1/8"M
61	RA33277	1	TAPPO OTTONE C/SONDA C.L.mm110+SIC.12bar	BRASS CAP LVL CONT. FLOAT mm110
62	PE21002	1	BLOCCHETTO M2 VIE MATE-N-LOK	2 WAY CONNECTOR
63	PG51033	1	GUARNIZIONE TEFLON ø33.2x40x2	TEFLON GASKET Ø33,2X40X2
64	RA30803	1	RACCORDO 75° 1/8Fx1/8Fx1/8M	Y-VALVE 75° 1/8FX1/8FX1/8M
65	RA3408	1	VALVOLA NON RITORNO MOLLA DURA	NON RETURN VALVE - HEAVY SPRING
66	RA31904	1	RACCORDO DIRITTO 6x8 1/8"F	STRAIGHT VALVE 6X8 1/8"F
67	RA3186	1	RACCORDO DIRITTO 1/8"M OGIVA ø4/2	STRAIGHT VALVE 1/8"M Ø4/2
68	PE2303	1	TERMOSTATO 160°C RIPRISTINO	THERMOSTAT MANUAL RESET
69	PE23447	1	TERMOSTATO 235°C R.A. 16A	THERMOSTAT
70	VI7318	1	RONDELLA DENTELLATA M4	WASHER
71	VI7130	1	VITE AUT. NIC. TC TC 3.5x9.5	SCREW 3,5X9,5
72	IS4020	1	ISOLANTE CALDAIA STEAM-TECH DX	BOILER INSULATION
	IS4021	1	ISOLANTE CALDAIA STEAM-TECH SX	BOILER INSULATION
73	VI7152	1	VITE AUTOFIL. TC TC CROM. NERA 3,5X9,5	SCREW 3,5X9,5
74	VI7318	2	RONDELLA DENTELLATA M4	LOCK WASHER M4
75	PG52074	1	GUARNIZIONE SILICONE Ø50 SP.4(REV.2)	EPDM GASKET Ø 45
76	RA31634	1	TAPPO DRENAGGIO 1 1/2"F	BOILER DRAIN CAP 1 1/2"F
77	85120230	3	VITE TBEI ISO 7380 M6X16 INOX	SCREW
78	PG53015	mt 0.35	TUBO SILICONE TELATO INOX Ø5X11	HOSE
79	PG5209	2	FASCETTA STRIK MONO.9 -11	SINGLE EAR CLAMP
80	CA17006V1	1	MANTELLO DX STEAM BOX MINI	RIGHT PANEL
81	CA17009V1	1	STAFFA PORTA SERBATOI STEAM BOX MINI	SUPPORT MOUNT FOR TANKS
82	85120220	2	VITE TBEI ISO 7380 M6x10 INOX	SCREW TBEI M6X10 INOX
83	CA1231	1	SERBATOIO ACQUA	WATER TANK
84	RA3140	1	PORTAGOMMA C/FILTRO IN OTTONE	TUBE COUPLER W/ FILTER
85	PG5247	1	FASCETTA BIFILIARE 9.8x10.4	CLAMP 9,8X10,4
86	RA3020	1	PORTAGOMMA 7x1/8"M	TUBE COUPLER 7X1/8"M
87	PG53611	1	TUBO OTTONE 4x3 L.230	BRASS TUBE FOR TUBE CONNECTOR
88	PG5247	1	FASCETTA BIFILIARE 9.8x10.4	CLAMP 9,8X10,4
89	RA3037	1	PORTAGOMMA 7x1/8"M 90°	TUBE COUPLER 7X1/8"M 90°
90	PG5247	1	FASCETTA BIFILIARE 9.8x10.4	CLAMP 9,8X10,4
91	PE2255	1	INTERRUTTORE REED GALLEGGIANTE VERTICALE	CONTROL FLOAT WATER TANK VERT.
92	PE21002	1	BLOCCHETTO M2 VIE MATE-N-LOK	2 WAY CONNECTOR
93	CA1230	1	SERBATOIO DETERGENTE	DETERGENT TANK
94	RA3140	1	PORTAGOMMA C/FILTRO IN OTTONE	TUBE COUPLER W/ FILTER
95	PG5247	1	FASCETTA BIFILIARE 9.8x10.4	CLAMP 9,8X10,4
96	RA3020	1	PORTAGOMMA 7x1/8"M	TUBE COUPLER 7X1/8"M
97	PG5247	1	FASCETTA BIFILIARE 9.8x10.4	CLAMP 9,8X10,4
98	85120220	4	VITE TBEI ISO 7380 M6x10 INOX	SCREW TBEI M6X10 INOX
99	PP0008	1	SPORTELLO COPRI PRESA COMPLETO	STEAM SOCKET FLAP COVER
100	120102	1	CORPO PRESA INFERIORE	BOTTOM SOCKET COVER
101	120101	1	CORPO PRESA SUPERIORE	TOP SOCKET COVER
102	VI7105	2	VITE RAPID FIX ZN TC 3.9x16 NERA	SCREW ZN 3,9X16 RAPID FIX
103	VI7341	4	VITE AUT. ZN NERA TC TC 3.9x19 UNI6954	SCREW ZN 3,9X19
104	12004T	1	UGELLO ROTONDO MASCHIO 1/8"M	ROUND MALE NOZZLE 1/8"M
105	PG5142	2	OR 9.25x1.78 VITON NERO OR2037	O-RING 9,25X1,78 VITON
106	RA3167	1	RACCORDO GOMITO 6x8 1/8"F	ELBOW VALVE 6X8 1/8"F
107	RA3201	mt 0.27	TUBO TEFLON 6x8	TEFLON TUBE 6X8
107A	PG5360	mt 0.2	TUBO EPDM 12X15 STEAM TECH	HOSE 12X15
108	PE20314V1	1	CABLAGGIO STEAM BOX MINI 230V 3600W	COMPL. WIRING 230V 3600W
108A	PE21337	1	SPINA SCHUKO 16A 230V IP54	PLUG
109	CA17007V1	1	MANTELLO SX STEAM BOX MINI	LEFT PANEL
110	85120220	10	VITE TBEI ISO 7380 M6x10 INOX	SCREW TBEI M6X10 INOX

111	CA17008	1	COFANO COMANDI STEAM BOX MINI	TOP PANEL
112	PE2237	2	INTERRUTTORE 16A NERO CON LED	SWITCH 16A BLACK
114	PG5021	2	CAPPUCCIO QUADRATO GRANDE	SWITCH PROTECTION
115	PE22257	1	SPIA LUMINOSA VERDE	GREEN INDICATOR LIGHT W/ NUT
116	PE22197	1	SPIA LUMINOSA ROSSA	RED INDICATOR LIGHT W/ NUT
117	PG5106	2	OR 9.25x1.78 NBR GRIGIO OR2037	O-RING 9,25X1,78 NBR
118	PE24027	1	MANOMETRO/CONTAORE COMPLETO 6bar	ELECTRONIC BOARD
119	PG5115	1	OR 34.65x1.78 NBR NERO OR2137	O-RING 34,65X1,78 NBR
120	CA17010	1	STAFFA FISSAGGIO MANOMETRO STEAM BOX MINI	SUPPORT MOUNT PRESSURE GAUGE
121	VI7211	2	DADO ZINCATO M3 UNI 5588 ISO 4032	NUT ZN M3
122	85120220	7	VITE TBEI ISO 7380 M6x10 INOX	SCREW TBEI M6X10 INOX
123	PG53004	mt 1	PARABORDO PER STEAM BOX	RUBBER PROTECTIVE SEAL
124	PG5069B	1	IMBUTO FILETTATO IN GOMMA BLU	THREADED FUNNEL - BLUE
125	PG5069G	1	IMBUTO FILETTATO IN GOMMA GIALLO	THREADED FUNNEL - YELLOW
126	PG5145	2	GUARNIZIONE TUBI PASS. ELETTR./IDRAULICO	O-RING FOR ELECTRIC TUBING
127	RA3324	2	TAPPO PER IMBUTO EPDM NERO 60 SH	CAP FOR FUNNEL