TECNOVAP

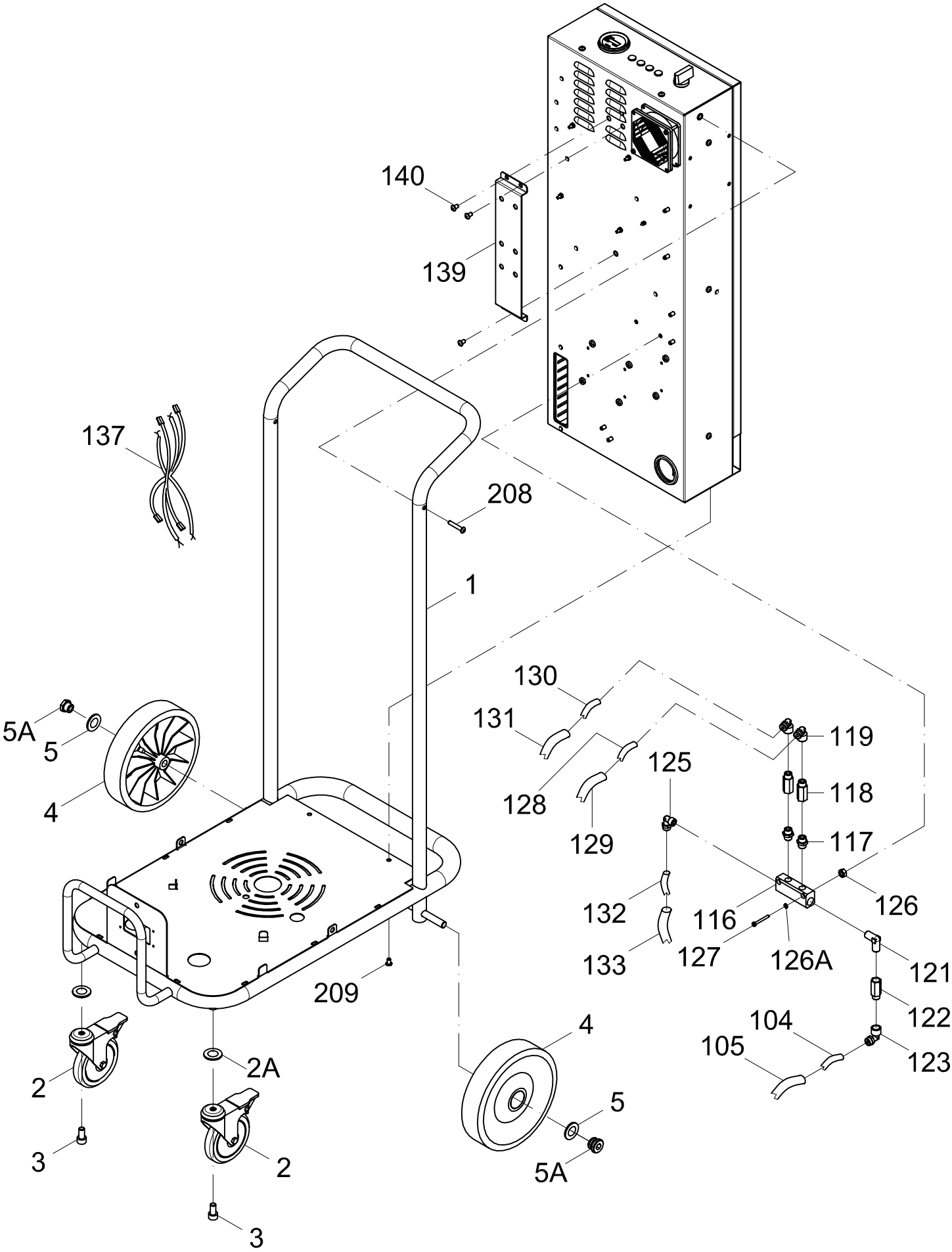
140
139
137
208
1
130
131
128
129
125
119
118
117
126
116
127
126A
121
122
123
104
105
132
133
5A
5
4
209
2A
2
3
4
5
5A
2
3

TECNOVAP

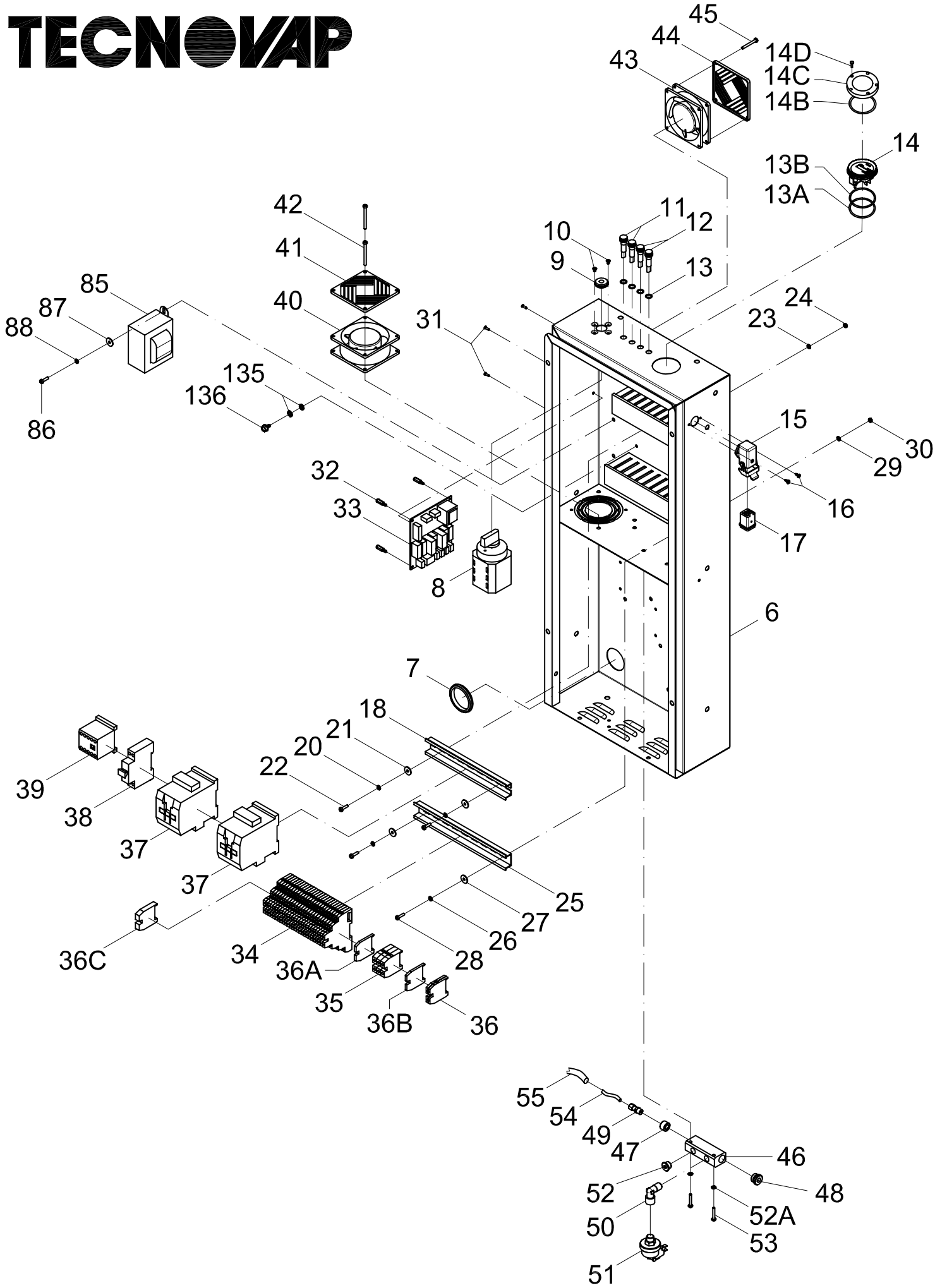
45
44
43
14D
14C
14B
14
13B
13A
42
41
40
11
12
10
9
13
85
87
88
86
31
24
23
135
136
15
30
29
16
32
33
17
8
6
7
18
21
20
22
39
38
37
37
25
27
26
28
36C
34
36A
35
36B
36
55
54
49
47
46
52
48
50
52A
53
51

TECNOVAP

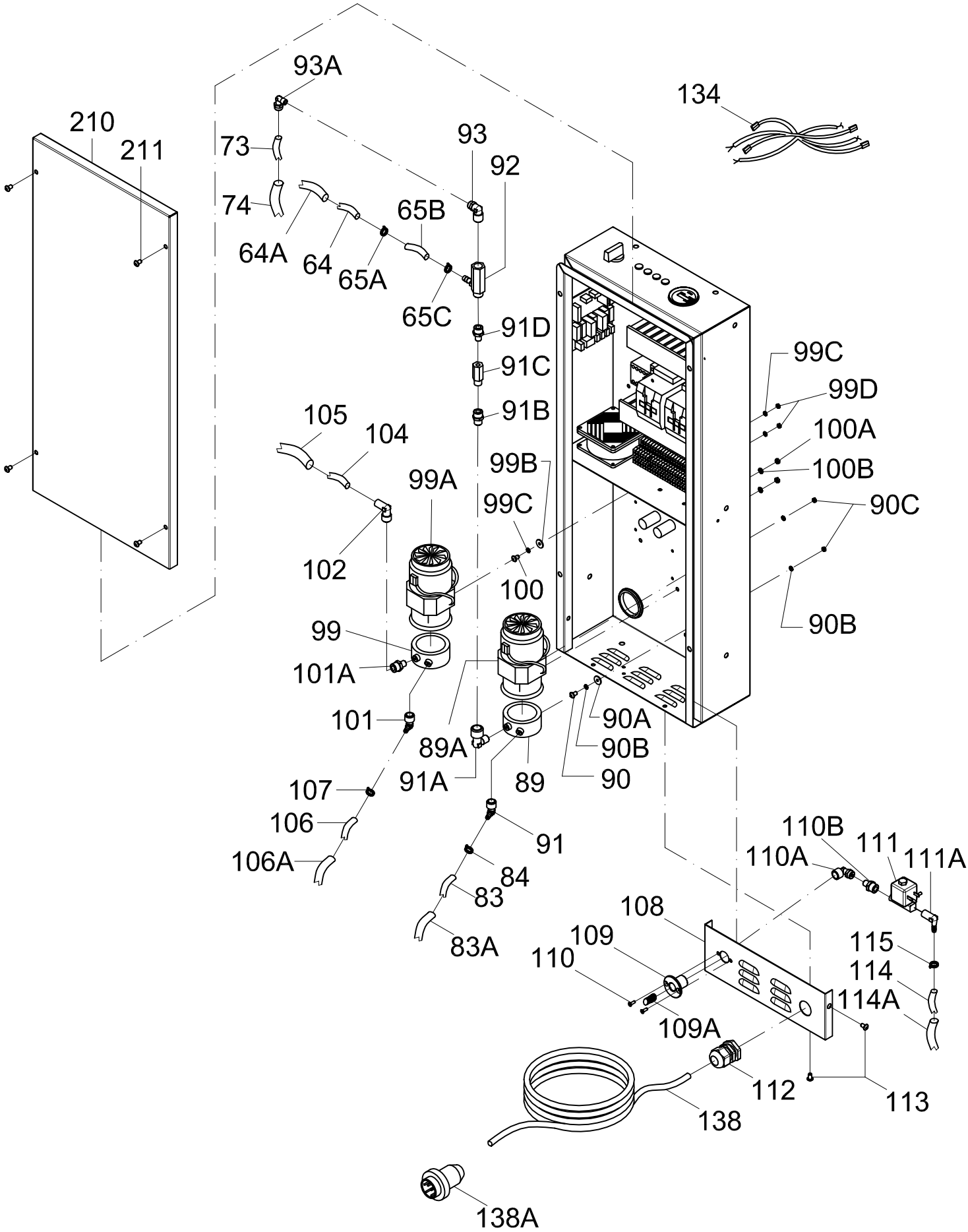
93A
134
210
211
73
93
92
74
65B
64A
64
65A
65C
91D
91C
91B
99C
99D
105
104
100A
99B
100B
99A
99C
90C
102
100
99
90B
101A
101
90A
89A
90B
91A
89
90
107
106
91
106A
110B
111
110A
111A
84
83
108
83A
109
115
110
114
114A
109A
112
113
138
138A

TECNOVAP

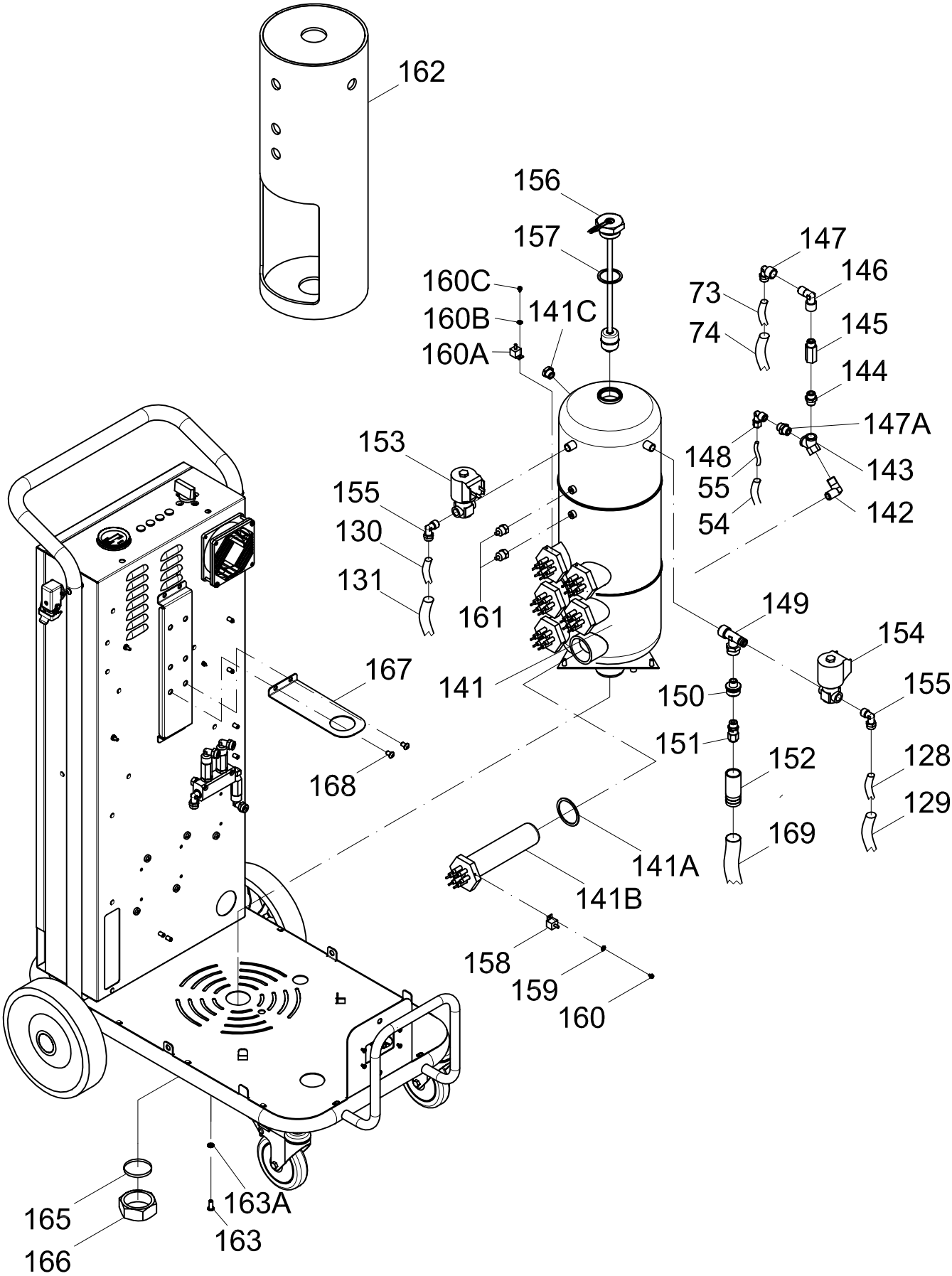
162
156
157
147
146
160C
73
160B
141C
145
74
160A
144
147A
153
148
143
55
155
142
54
130
131
161
149
154
167
141
150
155
151
152
128
168
129
169
141A
141B
158
159
160
165
163A
166
163

TECNOVAP

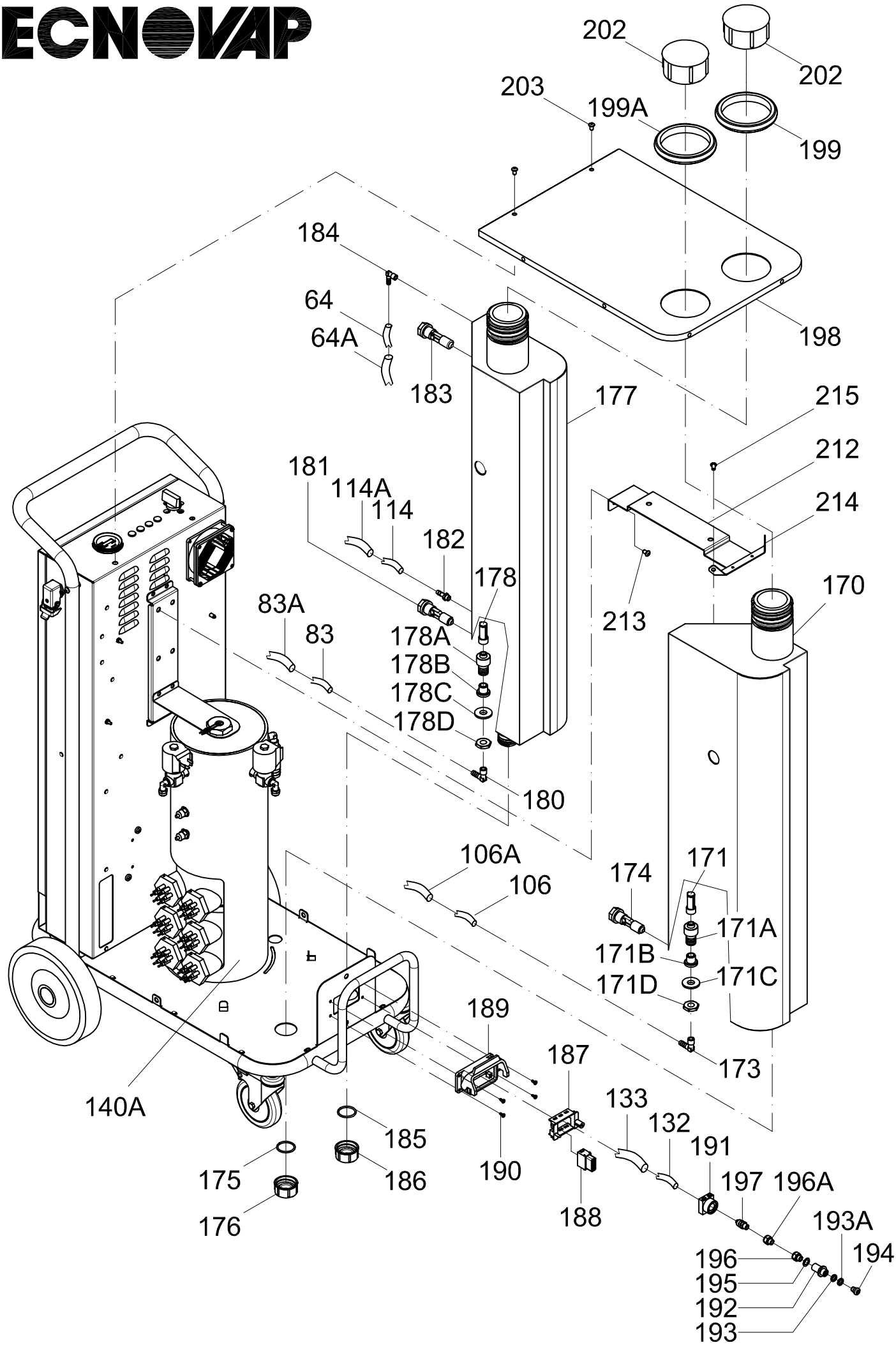
202
202
203
199A
199
184
64
64A
183
198
177
215
212
181
114A
114
214
182
178
170
83A
83
178A
213
178B
178C
178D
180
106A
106
174
171
171A
171B
171C
171D
189
187
173
140A
133
132
185
191
175
186
190
197
196A
176
188
193A
194
196
195
192
193

TECNOVAP

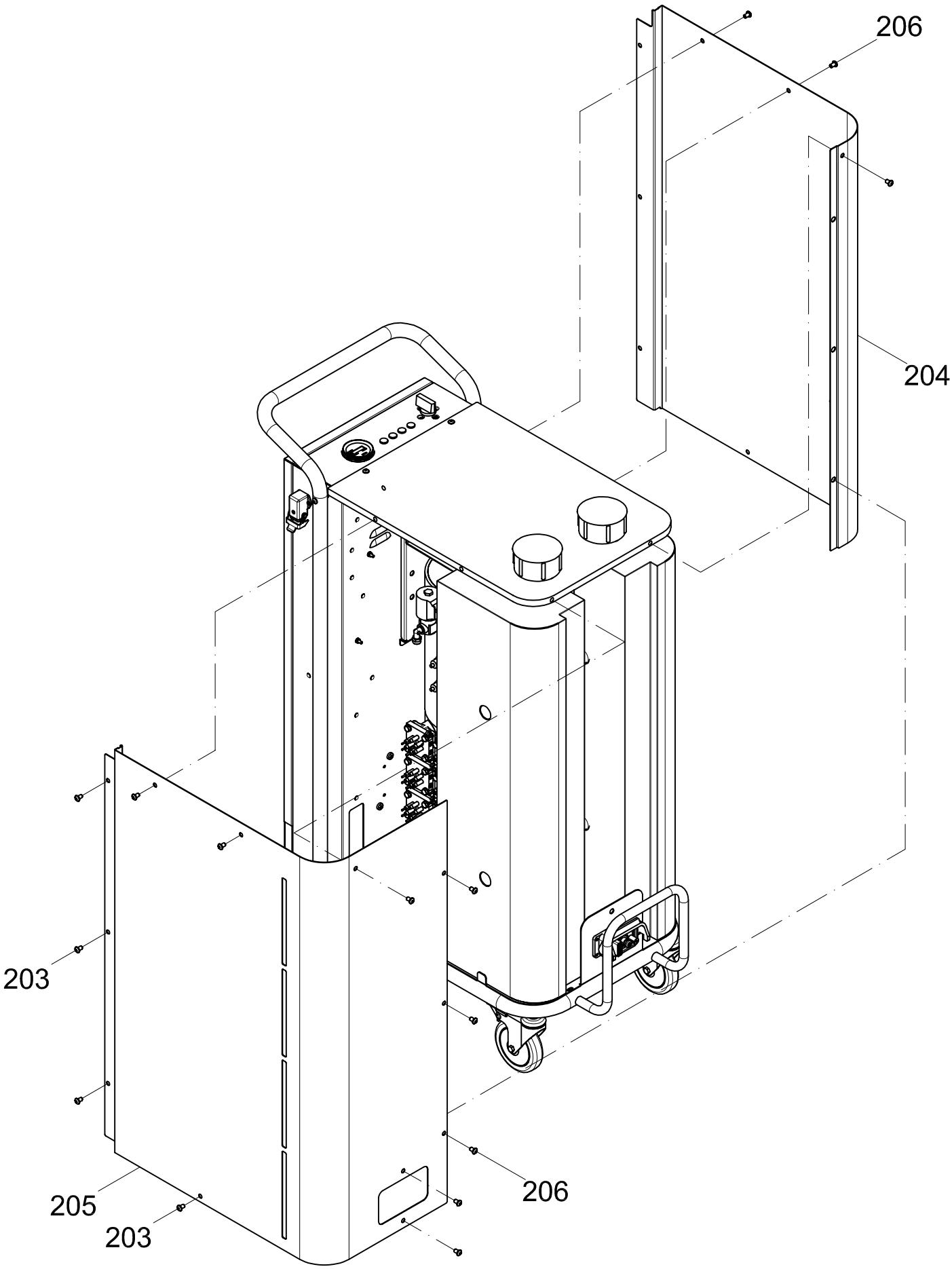

STEAM BOX INDUSTRIAL 21,6 kW cod. 3000300V4 REV.0 20/10/08				
Pos.	**CODICE**	**Q.tà**	**DENOMINAZIONE**	**DENOMINATION**
1	CR40006V1	1	CARRELLO STEAM BOX INDUSTRIAL	COMPLETE TROLLEY FOR STEAM BOX IND.
2	PG54098	2	RUOTA ø100 GIREVOLE CON FRENO BLU	WHEEL Ø100 10MAX20 - SWIVEL W/ BRAKE
2A	VI75008	2	RONDELLA PIANA M12 INOX	WASHER
3	VI71258	2	VITE TCEI M12x30 INOX	SCREW M12X30
4	PG54168	2	RUOTA POSTERIORE Ø200 S.BOX BLU	REAR WHEEL Ø 200
5	CR4006E	2	RONDELLA 16X32 PER RUOTE CARRELLO INOX	WASHER
5A	RA3163	2	TAPPO 3/8M	CAP
6	CA16095V1	1	QUADRO ELETTRICO STEM BOX INDUSTRIAL	ELECTRIC BOX STEAM BOX IND. ST. STEEL
7	PG5145	1	GUARNIZIONE TUBI PASSAGGIO	O-RING FOR ELECTRIC TUBING
8	PE22724	1	COMMUTATORE S.451 63A 400V	MAIN SWITCH S.451 63A 400V
9	PG5308	1	PASSATUBO 3.8-8.5x3-9x3x25	MOUTHPIECE 3,8-8,5X3-9X3X25
10	VI71215	2	VITE M4x6 TSP TC	SCREW M4X6
11	PE22257	2	SPIA LUMINOSA VERDE	GREEN INDICATOR LIGHT W/ NUT
12	PE22197	2	SPIA LUMINOSA ROSSA	RED INDICATOR LIGHT W/ NUT
13	PG5106	4	OR 9.25x1.78 NBR GRIGIO	O-RING 9,2X51,78 NBR
13A	PG5123	1	OR 29,82X2,62 SILICONE ROSSO	O-RING
13B	PG51237	1	OR 3193 Ø48,89X2,62 MANOMETRO	O-RING
14	PE24017	1	MANOMETRO/CONTAORE COMPLETO 10bar	PRESSURE GAUGE/HOUR COUNTER
14B	PG5115	1	OR 34.65X1.78 NBR NERO	O-RING 34.65X1.78
14C	1200117V1	1	CORNICE TERMOMETRO DIGITALE NERA	MOUNT BASE
14D	VI7114	5	VITE AUTOFIL.BR.TGS.2,9X9,5 UNI6956	SCREW
15	PE21023	1	CUSTODIA PANNELLO 90° METALLO	CONNECTOR COVER 90°
16	VI7130	2	VITE AUTOFILETTANTE NICHELATA TC TC 3.5x9.5	SCREW 3,5X9,5
17	PE21053	1	FRUTTO PRESA 7P+T 400V	SOCKET CONNECTOR 7P+T 400V 3~
18	RA3081	0.111	SUPPORTO BARRA DIN 35x15	SUPPORT 35X15
20	VI7318	2	RONDELLA DENTELLATA M4	LOCK WASHER M4
21	VI7312	2	RONDELLA GREMBIULINA 4x16	WASHER 4X16
22	VI7157	2	VITE 4.8 METALLO ZN TC M4x16	SCREW 4.8 ZN M4X16
23	VI7318	2	RONDELLA DENTELLATA M4	LOCK WASHER M4
24	VI7212	2	DADO M4	NUT M4
25	RA3081	0.125	SUPPORTO BARRA DIN 35x15	SUPPORT 35X15
26	VI7318	2	RONDELLA DENTELLATA M4	LOCK WASHER M4
27	VI7312	2	RONDELLA GREMBIULINA 4x16	WASHER 4X16
28	VI7157	2	VITE 4.8 METALLO ZN TC M4x16	SCREW 4.8 ZN M4X16
29	VI7318	2	RONDELLA DENTELLATA M4	LOCK WASHER M4
30	VI7212	2	DADO M4	NUT M4
31	VI74004	4	VITE TSP BRUGOLA M3x10	SCREW M3X10
32	PG5064	4	DISTANZIALE FILETTATO M5 L.15 CON GANCIO	THREADED SPACER M5 L.15
33	PE2347V	1	SCHEDA COMANDO ELETTRONICA TVAP20	ELECTRONIC BOARD TVAP20
34	PE20005	29	MORSETTO PER STEAM BOX 4mmq	CONNECTOR 4mmq
35	PE20015	3	MORSETTO PER STEAM BOX 10mmq	CONNECTOR 10mmq
36	PE20025	1	MORSETTO DI TERRA 10mmq M10/10	CONNECTOR FOR EARTHING 10mmq M10/10
36A	PE20035	1	PIASTRINA TERMINALE PER MORSETTO M10/10	TERMINAL PLATE FOR CONNECTOR M10/10
36B	PE20045	1	SEPARATORE DI CIRCUITO PER MORSETTO	SEPARATOR FOR CONNECTOR
36C	PE20055	1	BLOCCHETTO DI ARRESTO PER MORSETTO M10/10	STOPPER FOR CONNECTOR M10/10
37	PE23614	2	CONTATTORE 230/240V 50/60Hz 55A	CONTACTOR 230/240V 50/60Hz 55A
38	PE2068	1	PORTAFUSIBILE SEZIONE 1P+N 20A	FUSE HOLDER 1P+N 20A
39	PE2351	1	CONTATTORE POTENZA 230/50-60Hz	CONTACTOR 230/50-60Hz
40	PE40025	1	VENTOLA RAFFREDDAMENTO 92x92x25	COOLING FAN 92X92X25
41	PE40015	1	GRIGLIA PROTEZIONE PER VENTOLA 92x92	PROTECTION GRILL FOR FAN 92X92
42	VI71698	2	VITE M4x40 TC TC	SCREW M4X40
43	PE40025	1	VENTOLA RAFFREDDAMENTO 92x92x25	COOLING FAN 92X92X25
44	PE40015	1	GRIGLIA PROTEZIONE PER VENTOLA 92x92	PROTECTION GRILL FOR FAN 92X92
45	VI71695	1	VITE M4x40 TC TC	SCREW M4X40
46	RA20005	1	COLLETTORE 76X25X20 2X1/4F 1/4F PASSANTE	COLLECTOR
47	RA30704	1	RIDUZIONE 1/4"M 1/8"F	REDUCTION
48	RA31685	1	TAPPO DRENAGGIO 1/4"M	BOILER DRAIN CAP 3/8"M
49	RA3186	1	RACCORDO DIRITTO 1/8"M OGIVA 4/2	STRAIGHT VALVE 1/8"M Ø 4/2
50	RA31044	1	RACCORDO GOMITO 1/4"Mx1/4"F	ELBOW VALVE 1/4"MX1/4"F
51	PE2420	1	PRESSOSTATO 16A 250V 9-15 bar	PRESSURE SWITCH 16A 250V 9-15 bar
52	RA31685	1	TAPPO OTTONE 1/4"M	BRASS CAP 1/4"M
52A	VI7318	2	RONDELLA DENTELLATA M4	LOCK WASHER M4
53	VI71695	2	VITE M4X35 TC TC NIC. UNI7687 DIN7985	SCREW M4X35
54	RA3210	mt. 0.73	TUBO TEFLON ø4x2	TEFLON HOSE Ø 4X2
55	PG5338	mt. 0.48	TUBO GOMMA EPDM NERO ø7x10	EPDM HOSE Ø 7X10
64	RA33008	mt. 1.18	TUBO POLIURETANO BLU Ø 6X8	HOSE Ø 6X8
64A	PG5360	mt. 1.13	TUBO EPDM 12x15	EPDM HOSE 12X15
65A	PG5247	1	FASCETTA BIFILIARE 9,8-10,4	CLAMP
65B	PG5338	MT 0.05	TUBO GOMMA EPDM NERO Ø7X10	EPDM HOSE Ø7X10
65C	PG5246	1	FASCETTA BIFILIARE 10,4-11	CLAMP
73	RA3201	mt. 0.45	TUBO TEFLON ø6x8	TEFLON HOSE Ø 6X8
74	PG5360	mt. 0.4	TUBO EPDM 12x15	EPDM HOSE 12X15

83	RA33008	mt. 0.62	TUBO POLIURETANO BLU Ø 6X8	HOSE Ø 6X8
83A	PG5360	mt. 0.51	TUBO EPDM 12x15	EPDM HOSE 12X15
84	PG5231	1	FASCETTA CLIC 9,5-11/5 (CLIC 90)	CLAMP
85	PE20517	1	AUTO. 400VA 400/230V+TRASFO.10VA 400/12V	SELFTRANSFORMER
86	VI7157	2	VITE 4.8 METALLO ZN TC M4x16	SCREW 4.8 ZN M4X16
87	VI7312	2	RONDELLA GREMBIULINA 4x16	WASHER 4X16
88	VI7318	2	RONDELLA DENTELLATA M4	LOCK WASHER M4
89	PE20467	1	POMPA VOLUMETRICA 100L/H	PUMP 100LH
89A	PE20547	1	MOTORE A INDUZIONE 120W 230V	MOTOR 120W 230V
90	VI7128	4	VITE M6X25 TE ZN	SCREW M6X25
90A	VI7316	4	RONDELLA GREMBIULINA ZN 6X16	WASHER 6X16
90B	VI7303	8	RONDELLA DENTELLATA ZN M6	LOCK WASHER M6
90C	VI7201	4	DADO ZN M6 UNI 5588 ISO4032 UNI EN 24032	NUT M6
91	RA30372	1	RACCORDO GOMITO 3/8"M PG7	ELBOW VALVE 3/8"M PG7
91A	RA31607	1	RACCORDO GOMITO 3/8"M 3/8"F OTTONE	ELBOW VALVE 3/8"MF
91B	RA32007	1	RIDUZIONE 3/8M 1/4F	REDUCTION 3/8M 1/4F
91C	RA34084	1	VALVOLA N/RITORNO MF MOLLA DURA 1/4	NON RETURN VALVE - HEAVY SPRING 1/4
91D	RA32017	1	RIDUZIONE 3/8F 1/4M	REDUCTION 3/8F 1/4M
92	PE2425	1	DEAREATORE PER ET3000	BLEEDER VALVE FOR PUMP
93	RA31607	1	RACCORDO GOMITO 3/8"M 3/8"F OTTONE	ELBOW VALVE 3/8"MF
93A	RA31815	1	RACCORDO A GOMITO 6X8-3/8"M	ELBOW VALVE 6X8 3/8"M
99	PE20477	1	POMPA VOLUMETRICA 50L/H	PUMP 50LH
99A	PE20547	1	MOTORE A INDUZIONE 165W 230V	MOTOR 165W 230V
99B	VI7316	4	RONDELLA GREMBIULINA ZN 6X16	WASHER 6X16
99C	VI7303	8	RONDELLA DENTELLATA ZN M6	LOCK WASHER M6
99D	VI7201	4	DADO ZN M6 UNI 5588 ISO4032 UNI EN 24032	NUT M6
100	VI7128	4	VITE M6X25 TE ZN	SCREW M6X25
100A	VI7342	2	DADO M8 UNI 5589 ISO 4035 UNIEN 24035 ZN	NUT M8
100B	VI7306	2	RONDELLA DENTELLATA ZN M8	LOCK WASHER M8
101	RA30372	1	RACCORDO GOMITO 3/8"M PG7	ELBOW VALVE 3/8"M PG7
101A	RA32007	1	RIDUZIONE 3/8M 1/4F	REDUCTION 3/8M 1/4F
102	RA32018	1	RACCORDO A GOMITO 6X10 1/4"M (OGIVA)	ELBOW VALVE 6X10 1/4"M
104	RA33107	mt. 0.52	TUBO TEFLON ø6x10	TEFLON HOSE Ø 6X10
105	PG5360	mt. 0.47	TUBO EPDM 12x15	EDMP HOSE 12X15
106	RA33008	mt. 0.67	TUBO POLIURETANO BLU Ø 6X8	HOSE Ø 6X8
106A	PG5360	mt. 0.48	TUBO EPDM 12x15	EPDM HOSE 12X15
107	PG5231	1	FASCETTA CLIC 9,5-11/5 (CLIC 90)	CLAMP
108	CA16198	1	STAFFA COMPLETA INGRESSO ALIMENTAZIONE	SUPPORT MOUNT FOR POWER CORD
109	RA31557	1	ATTACCO PER RETE IDRICA 3/8"Fx1/4"F	COUPLER - DIRECT WATER FEED
109A	FL9000	1	FILTRO DET/ACQUA PER STEAM TECH	FILTER
110	VI71614	2	VITE TSP M4x20 INOX	SCREW M4X20 ST. STEEL
110A	RA30442	1	RACCORDO GOMITO 3/8 M 1/8F	ELBOW VALVE
110B	RA3187	1	RACCORDO DIRITTO 1/8M X1/8M F/CONICO	STRAIGHT VALVE
111	PE2329	1	ELETTROV. 6611 + BOBINA B6 230V	SOLENOID VALVE
111A	RA3037	1	PORTAGOMMA 7 1/8" MASCHIO 90°	TUBE COUPLER
112	PE20033	1	PRESSACAVO PLASTICA GRIGIA PG21	PLASTIC CABLEPRESS PG21
113	85120220	4	VITE TBEI M6x10 INOX	SCREW M6X10 ST. STEEL
114	RA33008	mt. 0.43	TUBO POLIURETANO BLU Ø 6X8	HOSE Ø 6X8
114A	PG5360	mt. 0.39	TUBO EPDM 12x15	EPDM HOSE 12X15
115	PG5231	1	FASCETTA CLIC 9,5-11/5 (CLIC 90)	CLAMP
116	RA20005	1	COLLETTORE 76X25X20 2X1/4F 1/4F PASSANTE	COLLECTOR
117	RA31875	2	RACCORDO DIRITTO 1/4"Mx1/4"M	STRAIGHT VALVE 1/4"MX1/4"M
118	RA34094	2	VALVOLA NON RITORNO MOLLA DEBOLE	NON RETURN VALVE - LIGHT SPRING
119	RA32028	2	RACCORDO GOMITO 6x10 1/4"F (OGIVA)	ELBOW VALVE 6X10 1/4"F
121	RA31474	1	RACCORDO GOMITO 1/4"Mx1/4"M	ELBOW VALVE 1/4"MX1/4M
122	RA34084	1	VALVOLA NON RITORNO MOLLA DURA	NON RETURN VALVE
123	RA32028	1	RACCORDO GOMITO 6x10 1/4"F (OGIVA)	ELBOW VALVE 6X10 1/4"F
125	RA32018	1	RACCORDO A GOMITO 6X10 1/4"M (OGIVA)	ELBOW VALVE 6X10 1/4"M
126	VI72023	2	DADO M8 INOX	NUT M8 - ST. STEEL
126A	VI7318	2	RONDELLA DENTELLATA M4	LOCK WASHER M4
127	VI71695	2	VITE M4x35 TC TC	SCREW M4X35
128	RA33107	mt. 0.47	TUBO TEFLON ø6x10	TEFLON HOSE Ø 6X10
129	PG5360	mt. 0.42	TUBO EPDM 12x15	EPDM HOSE 12X15
130	RA33107	mt. 0.60	TUBO TEFLON ø6x10	TEFLON HOSE Ø 6X10
131	PG5360	mt. 0.55	TUBO EPDM 12x15	EPDM HOSE 12X15
132	RA33107	mt. 0.68	TUBO TEFLON ø6x10	TEFLON HOSE Ø 6X10
133	PG5360	mt. 0.63	TUBO EPDM 12x15	EPDM HOSE 12X15
134	PE21005V1	1	CABLAGGIO STEAM BOX INUSTRIAL LATO QUADRO	WIRING - ELECTRIC BOX
135	VI7303	2	RONDELLA DENTELLATA M6	LOCK WASHER M6
136	VI7167	1	VITE F/R TE 6.3x13-14x1/2	SCREW 6,3X13-14X1/2
137	PE21015	1	CABLAGGIO STEAM BOX INUSTRIAL LATO MACCHINA	WIRING - MACHINE
138	PE21085	1	CAVO ALIM S/BOX IND H07RN-F4G6 L.8000mm	POWER CORD
138A	PE32008	1	SPINA 4P+T 400V 32A	PLUG
139	CA16295	1	STAFFA SUPORTO CALDAIA 3 LIVELLI	SUPPORT MOUNT FOR BOILER
140	85120220	3	VITE TBEI M6x10 INOX	SCREW M6X10 - ST. STEEL
140A	0902015V2	1	CALDAIA S/BOX IND COMPLETA 21,6 KW H540	BOILER S/BOX INDUSTRIAL 21,6 Kw

141	9902015V3	1	CALDAIA STEAM BOX INDUSTRIAL C/RES 21kW	BOILER W/ HEATING ELEMENT 21 kW
141A	PG51396	6	GUARNIZIONE RAME Ø42x50x1.5	COPPER GASKET Ø 42X50X1,5
141B	PE25226	6	RESISTENZA 230V 3600W 1" ¼	HEATING ELEMENT 230V 3600W
141C	RA31688	1	TAPPO OTTONE 1/4F	CAP
142	RA31474	1	RACCORDO GOMITO 1/4"M-1/4"M	ELBOW VALVE 1/4"M-1/4"M
143	RA31014	1	RACCORDO A Y 1/4"Fx1/4"Fx1/4"F	Y VALVE 1/4"FX1/4"FX1/4"F
144	RA31875	1	RACCORDO DIRITTO 1/4"Mx1/4"M	STRAIGHT VALVE 1/4"MX1/4"M
145	RA34084	1	VALVOLA NON RITORNO MOLLA DURA	NON RETURN VALVE - LIGHT SPRING
146	RA31044	1	RACCORDO GOMITO 1/4"Mx1/4"F	ELBOW VALVE 1/4"MX1/4"F
147	RA31675	1	RACCORDO GOMITO 6x8 1/4"F	ELBOW VALVE 6X8 1/4"F
147A	RA30704	1	RIDUZIONE 1/4"M 1/8"F	REDUCTION
148	RA3155	1	RACCORDO 90° 1/8"M x 4/2	VALVE
149	RA31037	1	RACCORDO A T 1/4"FX1/4"FX1/4"M	3-WAYS VALVE 1/4FFM
150	RA31874	1	RACCORDO DIRITTO 1/4"Mx1/4"FxM22	STRAIGHT VALVE 1/4"MX1/4"FXM22
151	RA34064	1	VALVOLA SIC. 97/23CE > 50 12 bar 1/4"M	SAFETY VALVE 97/23CE > 50 13 bar 1/4"M
152	RA30194	1	PORTAGOMMA M22x1.5xø25 L.60	TUBE COUPLER M22X1,5XØ25 L.60
153	PE23024	1	ELETTROVAL. SERIE99 PTFE DN 2.8 20VA 1/4"Fx1/4"F	SOLENOID VALVE 99 PTFE DN 2.8 20VA
154	PE23014	1	ELETTROVAL.SERIE99 PTFE DN 1.5 1/4"Fx1/4"F	SOLENOID VALVE 99 PTFE DN 1.5
155	RA32018	2	RACCORDO GOMITO 6X10 1/4"M (OGIVA)	ELBOW VALVE 6X10 1/4"M
156	RA33387	1	TAPPO OTTONE CON SONDA L.280 + SIC.15 bar	BRASS CAP LVL CONT. FLOAT L.280
157	PG51033	1	GUARNIZIONE TEFLON ø33.2x40x2	TEFLON GASKET Ø33,2X40X2
158	PE2344	6	TERMOSTATO 275° RIPRISTINO	RESET THERMOSTAT 275°
159	VI7318	6	RONDELLA DENTELLATA M4	LOCK WASHER M4
160	VI7130	6	VITE AUTOFILETTANTE NICHELATA TCC TC 3.5x9.5	SCREW 3,5X9,5
160A	PE23447	2	TERMOSTATO 235° RIPRISTINO R.A.	THERMOSTAT 235°
160B	VI7318	2	RONDELLA DENTELLATA M4	LOCK WASHER M4
160C	VI7130	2	VITE AUTOFILETTANTE NICHELATA TCC TC 3.5x9.5	SCREW 3,5X9,5
161	PE2334	2	TERMOSTATO 175° RIPRISTINO	RESET THERMOSTAT 175°
162	IS40215	1	ISOLANTE CALDAIA STEAM BOX INDUSTRIAL H.590	BOILER INSULATION H540
163	85120230	3	VITE TBEI ISO 7380 M6X16 INOX	SCREW
163A	VI73036	3	RONDELLA DENTELLATA M6 INOX	WASHER
165	PG52074	1	GUARNIZIONE EPDM ø45 Sp.4	EPDM GASKET Ø 45
166	RA31634	1	TAPPO DRENAGGIO 1 1/2"F	BOILER DRAIN CAP 1 1/2"F
167	CA16285	1	STAFFA FISSAGGIO CALDAIA	SUPPORT MOUNT FOR BOILER
168	85120220	2	VITE TBEI M6x10 INOX	SCREW M6X10 - ST. STEEL
169	PG52005	mt. 0.59	TUBO SILICONE NERO 25x28	SILICONE HOSE 25X28
170	CA126DX	1	SERBATOIO DETERGENTE STEAM BOX INDUSTRIAL	DETERGENT TANK
171	FL9000	1	FILTRO DETERGENTE ACQUA	WATER / DETERGENT FILTER
171A	RA37018	1	RACCORDO PORTAFILTRO	VALVE FOR FILTER
171B	PG50008	1	GOMMINO ESPANSIONE	RUBBER
171C	PP00018	1	RONDELLA M16 PLASTICA	WASHER
171D	PP00028	1	DADO M16 PLASTICA	NUT
173	RA31058	1	RACCORDO GOMITO 6X8 - 1/8"M GIREVOLE	ELBOW VALVE
174	PE2327	1	INTERRUTTORE REED GALLEGGIANTE	TANK FLOAT - HORIZ.
175	PG5123	1	OR 29.82x2.62 SILICONE ROSSO	O-RING 29,82X2,62 SILICONE
176	RA3320	1	TAPPO NERO SCARICO SERBATOIO	DRAIN CAP WATER / DET. TANK
177	CA126SX	1	SERBATOIO ACQUA STEAM BOX INDUSTRIAL	WATER TANK
178	FL9000	1	FILTRO DETERGENTE ACQUA	WATER / DETERGENT FILTER
178A	RA37018	1	RACCORDO PORTAFILTRO	VALVE FOR FILTER
178B	PG50008	1	GOMMINO ESPANSIONE	RUBBER
178C	PP00018	1	RONDELLA M16 PLASTICA	WASHER
178D	PP00028	1	DADO M16 PLASTICA	NUT
180	RA31058	1	RACCORDO GOMITO 6X8 - 1/8"M GIREVOLE	ELBOW VALVE
181	PE2327	1	INTERRUTTORE REED GALLEGGIANTE	TANK FLOAT - HORIZ.
182	RA31068	1	RACCORDO DIRITTO 6X8 - 1/8"M GIREVOLE	STRAIGHT VALVE 1/8M
183	PE2327	1	INTERRUTTORE REED GALLEGGIANTE	TANK FLOAT - HORIZ.
184	RA31058	1	RACCORDO GOMITO 6X8 - 1/8"M GIREVOLE	ELBOW VALVE
185	PG5123	1	OR 29.82x2.62 SILICONE ROSSO	O-RING 29,82X2,62 SILICONE
186	RA3320	1	TAPPO NERO SCARICO SERBATOIO	DRAIN CAP WATER / DET. TANK
187	PE30015	1	TELAIO INCERNERIATO 3 MODULI PER CUSTODIA	FRAME FOR 3 CONNECTORS
188	PE30035	1	FRUTTO 1 MODULO PER CONTATTO F 12P	CONNECTOR FOR 12P CONTACT
189	PE30045	1	CUSTODIA DA PANNELLO CON LEVA	CONNECTOR COVER W/ SNAP
190	VI7137	4	VITE AUTOFIL. Ni TC TC. 3,5X13	SCREW 3,5X13
191	PP00195	1	BLOCCHETTO ISOLANTE ALTA TEMP. PER UGELLO	INSULATION BLOCK FOR NOZZLE
192	7200124	1	ATTACCO PER UGELLO MASCHIO 1/8"F M8x1 F	COUPLER FOR MALE NOZZLE
193	PG51004	1	GUARNIZIONE TEFLON + OR SILICONE	TEFLON GASKET + OR SILICONE
193A	PG51428	1	OR 9,25 X 1,78 VITON FLUORAZ	O-RING
194	7200134	1	UGELLO MASCHIO M8x1 M	MALE NOZZLE M8X1 M
195	VI7339	1	RONDELLA DI SPESSORAMENTO 10x16x0.5	WASHER 10X16X0,5
196	RA3142	1	RACCORDO DIRITTO 1/8"Fx1/8"M	STRAIGHT VALVE 1/8"FX1/8"M
196A	RA30724	1	RIDUZIONE 1/4"F 1/8"M	REDUCTION 1/4F 1/8M
197	RA32008	1	RACCORDO DIRITTO 6x10 1/4"M (OGIVA)	STRAIGHT VALVE 6X10 1/4"M
198	CA19018	1	COFANO S.BOX IND/PROF (NO ASP.) SALDATO	TOP PANEL - NO VACUUM
199	PG51458	1	PASSATUBO Ø80 WATER	O-RING FOR ELECTRIC TUBING
199A	PG51468	1	PASSATUBO Ø80 DETERGENT	O-RING FOR ELECTRIC TUBING
202	PP00008	2	TAPPO VENTILATO SENZA VALVOLA 80 PASSO 6	CAP FOR FUNNEL

203	85120220	11	VITE TBEI M6x10 INOX	SCREW M6X10 - ST. STEEL
204	CA19035	1	MANTELLO SX STEAM BOX INDUSTRIAL	LEFT PANEL - S. BOX IND.
205	CA19045	1	MANTELLO DX STEAM BOX INDUSTRIAL	RIGHT PANEL - S. BOX IND.
206	85120220	10	VITE TBEI M6x10 INOX	SCREW M6X10 - ST. STEEL
208	VI76005	2	VITE TBEI M6x35 INOX	SCREW M6X35 - ST. STEEL
209	85120220	2	VITE TBEI M6x10 INOX	SCREW M6X10 - ST. STEEL
210	CA19055	1	COPERCHIO QUADRO ELETTRICO STEAM BOX	COVER FOR ELECTRIC BOX
211	85120220	4	VITE TBEI M6x10 INOX	SCREW M6X10 - ST. STEEL
212	CA16286	1	STAFFA FISSAGGIO FUSTO	FIXING MOUNT FOR VACUUM DRUM
213	85120220	2	VITE TBEI M6x10 INOX	SCREW M6X10 - ST. STEEL
214	CA16296	1	STAFFA FISSAGGIO SERBATOI	FIXING MOUNT FOR TANKS
215	85120220	2	VITE TBEI M6x10 INOX	SCREW M6X10 - ST. STEEL