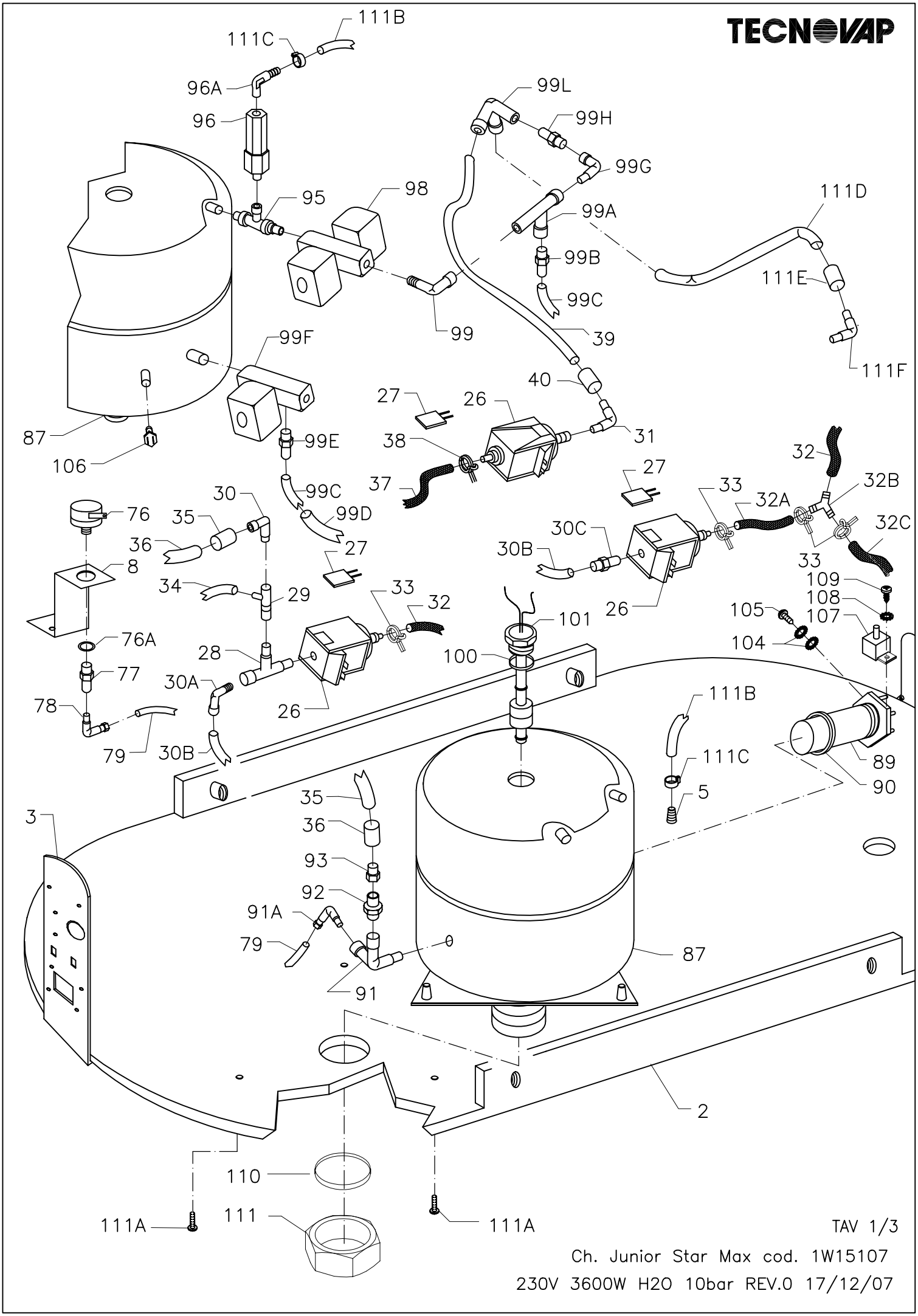
TECNOVAP
111B
111C
96A
96
95
98
99L
99H
99G
99A
99B
99C
99
39
111D
111E
111F
99F
40
27
26
31
38
37
87
106
99E
99C
99D
27
30
35
36
76
8
34
29
33
32
76A
77
78
79
28
30A
30B
26
101
100
27
33
32A
32B
32C
30C
30B
26
33
109
108
107
105
104
111B
111C
5
89
90
3
35
36
93
92
91A
79
91
87
2
110
111
111A
111A
TAV 1/3
Ch. Junior Star Max cod. 1W15107
230V 3600W H2O 10bar REV.0 17/12/07

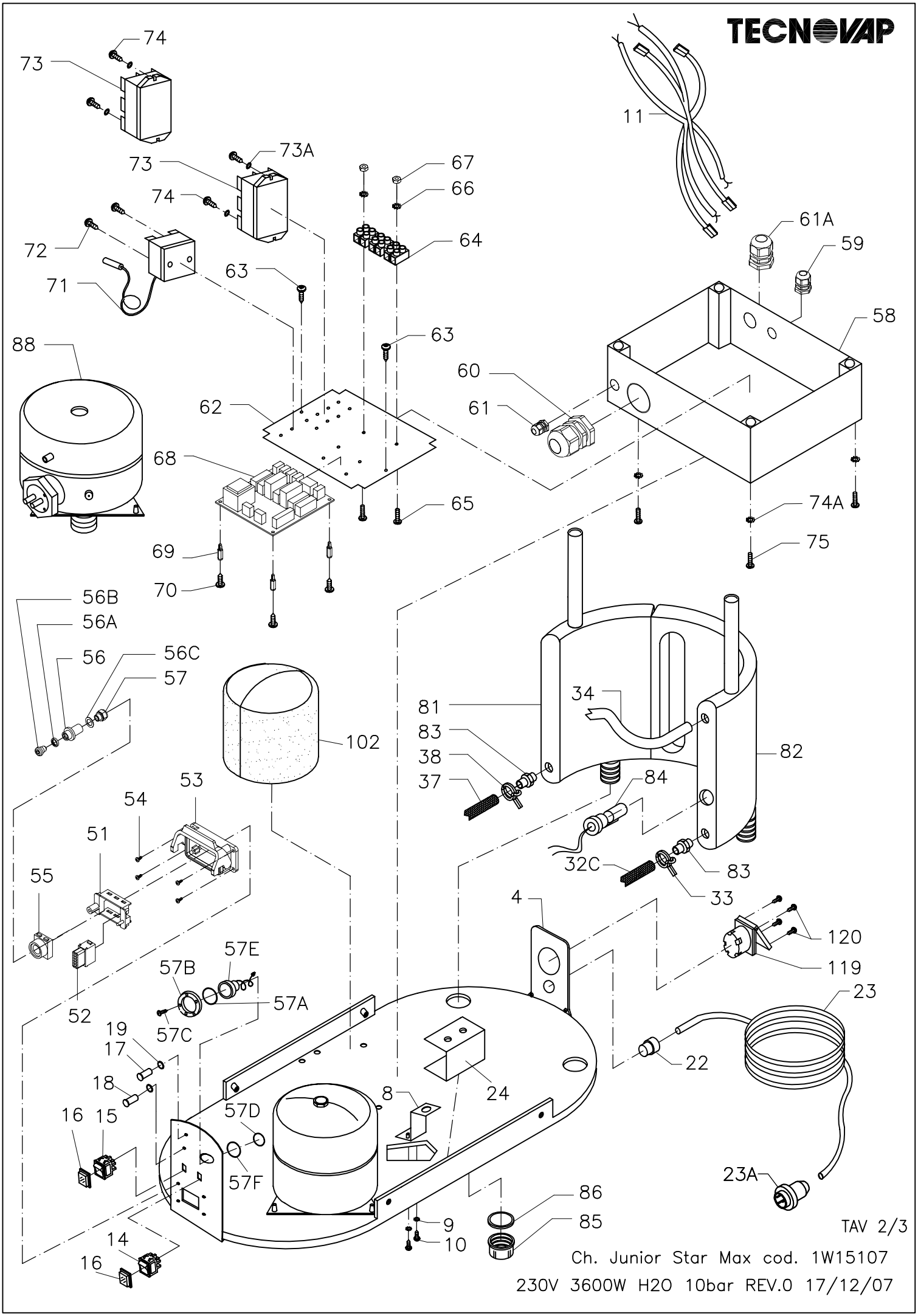
TECNOVAP
74
73
73A
74
72
71
63
67
66
64
63
11
61A
59
58
88
60
61
62
68
65
74A
75
69
70
56B
56A
56
56C
57
102
81
83
38
37
34
82
84
32C
83
33
53
54
51
55
52
4
120
119
57E
57B
57A
57C
23
19
17
18
22
24
8
16
15
57D
57F
23A
86
85
9
10
14
16
TAV 2/3
Ch. Junior Star Max cod. 1W15107
230V 3600W H2O 10bar REV.0 17/12/07

TECNOVAP

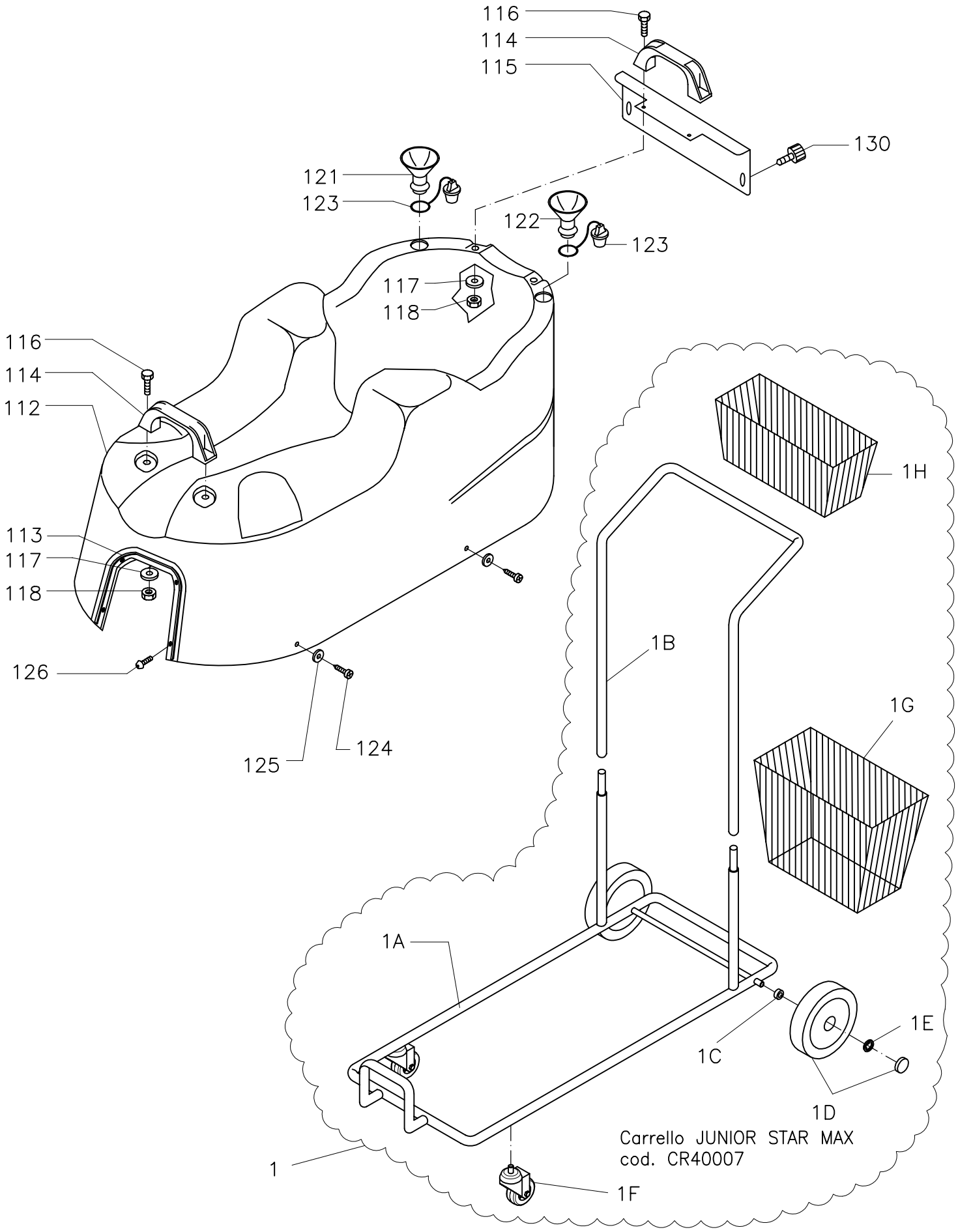

TAV 3/3

Ch. Junior Star Max cod. 1W15107

230V 3600W H2O 10bar REV.0 17/12/07

Pos.	Codice	Q.tà	Denominazione	Denomination
CH. JUNIOR STAR MAX 3600W 230V H2O 10bar cod. 1W15107 REV. 0 17/12/07				
1	CR40007	1	CARRELLO COMPLETO JR STAR MAX	COMPLETE TROLLEY JR MAX
1A	CR4007A	1	CARRELLO JR STAR MAX (LATO RUOTE)	TROLLEY (WHEEL SIDE)
1B	CR4007B	1	CARRELLO JR STAR MAX (MANIGLIONE)	TROLLEY (HANDLE SIDE)
1C	VI73003	2	RONDELLA GREMBIULINA 12X24	WASHER
1D	PG5416	2	RUOTA POSTERIORE Ø200 STEAM TECH	REAR WHEEL
1E	PG5245	2	COLLARE ELASTICO FERMO RUOTA	WHEEL LOCK
1F	PG5404	2	RUOTA Ø60 10MAX15 GIREVOLE	WHEEL Ø60 10MAX15 - SWIVEL
1G	CR8000	1	CESTELLO JUNIOR 400X260X150	BASKET JR
1H	CR4002E	1	CESTO F/CROMATO 345X140X110 I.265	BASKET
2	CA11446V1	1	CARROZZERIA INFERIORE NERA	CHASSIS
3	CA11457	1	STAFFA ANTERIORE PANNELLO	FRONT BRACKET
4	CA11466V1	1	STAFFA POSTERIORE ENTRATA	BACK BRACKET
5	RA3020	1	PORTAGOMMA 7 X1/8 MASCHIO	TUBE COUPLER
8	CA11477	1	STAFFA PORTA PRESSOSTATO	MOUNT BASE
9	VI7318	2	ROND. DENT. Ø4	WASHER
10	VI71216	2	VITE M4X10 TC TC INOX	SCREW
11	PE20502V2	1	CABLAG. CH.JR STAR MAX 230V 3600W	WIRING
14	PE2237	1	INTERR. 16A NERO	BOILER SWITCH
15	PE2237	1	INTERR. 16A NERO	GENERAL POWER SWITCH
16	PG5021	2	CAPP. QUADRATO GRANDE	RUBBER SWITCH PROTECTION
17	PE22257	1	SPIA LUMINOSA VERDE F/D	GREEN CONTROL LIGHT
18	PE22197	1	SPIA LUMINOSA ROSSA F/D	RED CONTROL LIGHT
19	PG5106	2	OR 9.25X1.78 NBR GRIGIO RAL7035	O-RING
22	PE20033	1	PRESSACAVO PG21	CABLE PRESS
23	PE2530V1	1	CAVO 3X2,5 M8 NEOPRENE JUNIOR STAR	CABLE
23A	PE2024	1	SPINA VOL.2P+T 16A 220V 50hz IP67	PLUG
24	RA3058	1	STAFFA SUPP. POMPE JUNIOR	MOUNT BASE
24A	RA3056	1	STAFFA SUPP. POMPE	MOUNT BASE
26	PE2404	3	POMPA ET500 P-1/8"F NBR 120/60	PUMP ET500
27	PE2408	3	TERMOPROTETTORE 100°C	THERMAL CUT OUT 100° C
28	RA31035	1	RACCORDO A T 1/8FX1/8FX1/8M	VALVE
29	PE2415	1	DEAREATORE PER POMPA	BLEEDER VALVE FOR PUMP
30	RA3105	1	RACCORDO GOMITO 6X8 - 1/8"M	ELBOW VALVE
30A	RA3105	1	RACCORDO GOMITO 6X8 - 1/8"M	ELBOW VALVE
30B	RA3201	MT 0.1	TUBO TEFLON Ø6X8	HOSE
30C	RA3183	1	RACCORDO DIRITTO 6X8-1/8M	STRAIGHT VALVE
31	RA3104	1	RACCORDO GOMITO 6X4-1/8M	ELBOW VALVE
32	PG5303	MT 0.14	TUBO GOMMA CALZ. NERO Ø5X10	HOSE
32A	PG5303	MT 0.08	TUBO GOMMA CALZ. NERO Ø5X10	HOSE
32B	RA31017	1	RACCORDO A Y PORTAGOMMA 7	3-WAYS VALVE
32C	PG5303	MT 0.14	TUBO GOMMA CALZ. NERO Ø5X10	HOSE
33	PG5247	6	FASCETTA BIFILARE 9.8-10.4	CLAMP
34	PG5365	MT 0.22	TUBO PVC TRASPARENTE Ø6X9	HOSE
35	RA3201	MT 0.145	TUBO TEFLON Ø6X8	HOSE
36	PG53006	MT 0.11	TUBO EPDM 13,5X8,5 NERO	HOSE
37	PG5327	MT 0.18	TUBO GOMMA CALZ. NERO Ø4X8	HOSE
38	PG5247	2	FASCETTA BIFILARE 9.8-10.4	CLAMP
39	RA3209	MT 0.26	TUBO TEFLON Ø6X4	HOSE
40	PG5338	MT 0.25	TUBO GOMMA EPDM NERO Ø7X10	HOSE
51	PE30015	1	TELAIO INCERNERIATO 3 MODULI	FRAME FOR 3 CONNECTORS
52	PE30035	1	FRUTTO 1 MODULO PER CONTATTO F 12P	CONNECTOR FOR 12P CONTACT
53	PE30045	1	CUSTODIA DA PANNELLO CON LEVA	CONNECTOR COVER W/ SNAP
54	VI7152	4	VITE TC TC CROMATA NERA 3.5x9.5	SCREW 3,5X9,5
55	PP00195	1	BLOCCHETTO ISOLANTE ALTA TEMPER.	INSULATION BLOCK FOR NOZZLE
56	7200124	1	ATTACCO UGELLO MASCHIO 1/8"F M8x1 F	COUPLER FOR MALE NOZZLE
56A	PG51004	1	GUARNIZIONE TEFLON + OR SILICONE	TEFLON GASKET + OR SILICONE
56B	7200134	1	UGELLO MASCHIO M8x1 M	MALE NOZZLE M8X1 M
56C	VI7339	1	RONDELLA DI SPESSORAM. 10x16x0.5	WASHER 10X16X0,5
57	RA3142	1	RACCORDO DIRITTO 1/8"Fx1/8"M	STRAIGHT VALVE 1/8"FX1/8"M
57A	PG5115	1	OR 34.65X1.78 NBR NERO	O-RING 34,65X1,78
57B	1200117V1	1	CORNICE TERMOMETRO DIGITALE NERA	THERMOMETER FRAME
57C	VI7105	5	VITE RAPID FIX ZN.TC.3,9X16 NERA	SCREW 3,9X16
57D	PG5123	1	OR 29,82X2,62 SILICONE ROSSO	O-RING
57E	PE24017	1	MANOMETRO/CONTAORE COMPL. 10bar	PRESSURE-HOUR CONUTER
57F	PG51237	1	OR 3193 Ø48,89X2,62 MANOMETRO DIGITALE	O-RING
58	PE44207	1	CASSETTA FORATA IP56 240X190	ELECTRIC BOX

59	PE2014	1	PRESSACAVO PLASTICA GRIGIA PG13,5	CABLE PRESS
60	PE20037	1	PRESSACAVO PLASTICA GRIGIA ISO40	CABLE PRESS
61	PE20034	1	PRESSACAVO C/DADO PLASTICA PG9	CABLE PRESS
61A	PE20033	1	PRESSACAVO PG21	CABLE PRESS
62	RA44208V1	1	LAMIERA ZN SP.10/10 X PE44207 X J/MAX	SHEET
63	VI7113	2	VITE AUT.TC ZN B 3,9X6,5 DIN7981	SCREW
64	PE2015	0.5	MORSETTIERA MAMMUTH Ø4 MM2 12	MAMMUTH Ø4
65	VI7154	2	VITE 4.8 METALLO ZN TC. M3X20	SCREW
66	VI7319	2	RONDELLATA ZN M3	WASHER
67	VI7211	2	DADO ZN M3 UNI5588	NUT
68	PE2347W	1	SCHEDA C.ELETTR.TVAP20+AUT PER EW	ELECTRONIC BOARD
69	PG5064	4	DISTANZIALE FIL. M3 L.15 C/GANCIO	THREADED SPACER
70	VI7109	4	VITE TSP TC M3X10 ZN	SCREW
71	PE2340	1	TERMOSTATO 240°C A BULBO R.A.	THERMOSTAT
72	VI7121	2	VITE M4X6 TC TC UNI7687	SCREW
73	PE2010	2	RELAY 200/240V AC 20A	RELAY
73A	VI7325	2	RONDELLA PIANA M4	WASHER M4
74	VI7113	4	VITE AUT. TC ZN B 3.9X6.5 UNI6954	SCREW
74A	VI7318	4	RONDELLA DENTELLATA M4	WASHER
75	VI71615	4	VITE TC UNI 7687 DIN 7985 ZN M4X12	SCREW
76	PE2411	1	PRESSOSTATO 16A 250V 4-9bar	PRESSURE SWITCH
76A	VI7339	1	RONDELLA DI SPESS. 10X16X0,5	SPACER WASHER
77	RA31427	1	RACCORDO DIRITTO 1/8"FX1/8"F	STRAIGHT VALVE
78	RA3155	1	RACCORDO GOMITO 1/8M-4X2 OGIVA	ELBOW VALVE
79	RA3210	MT 0.38	TUBO TEFLON Ø4X2	HOSE
81	CA120D7	1	SERBATOIO JR. MAX DETERGENTE	TANK
82	CA120W7	1	SERBATOIO JR. STAR MAX ACQUA	TANK
83	RA3140	2	PORTAGOMMA C/FILTRO OTTONE	RUBBER OUTLET + BRASS NOZZLE
84	PE2327	1	INTERRUTTORE REED GALLEGG. ORIZZ.	REED SWITCH HORIZONTAL FLOAT
85	RA3320	2	TAPPO NERO SERBATOIO	CAP
86	PG5123	2	OR 29.8X2.62 SILICONE ROSSO	O-RING
87	09W1382	1	CALDAIA COMPL. J/STAR MAX 3600W 230V	BOILER
88	9900382V1	1	CALDAIA C/RES. J/STAR MAX 3600W 230V	BOILER W/HEATING ELEMENT
89	PE25226	1	RESISTENZA 230V 3600W 1" ¼	HEATING ELEMENT
90	PG51396	1	GUARNIZIONE RAME Ø42 X 50 X 1,5	GASKET
91	RA30803	1	RACCORDO 75° 1/8FX1/8FX1/8M	75° VALVE
91A	RA3155	1	RACCORDO GOMITO 1/8M-4X2 OGIVA	ELBOW VALVE
92	RA3408	1	VALV. N/RIT. MM MOLLA DURA	NON RETURN VALVE
93	RA31904	1	RACCORDO DIRITTO 6X8-1/8F	STRAIGHT VALVE
95	RA3185	1	RACCORDO A T 1/8MX1/8FX1/8M	T VALVE
96	RA3406	1	VALVOLA 1/8"M 12 bar CATEGORIA I°	SAFETY VALVE
96A	RA30372	1	RACCORDO GOMITO 3/8M PG Ø7	ELBOW VALVE
98	PE2337	1	ELETTROV.6650+2 BOB. 230V 1X1,5-1X2,5	SOLENOID VALVE
99	RA3147	1	RACCORDO GOMITO 1/8F-1/8M	ELBOW VALVE
99A	RA31035	1	RACCORDO A T 1/8FX1/8FX1/8M	3-WAYS VALVE
99B	RA3183	1	RACCORDO DIRITTO 6X8-1/8"M	STRAIGHT VALVE 6X8 1/8"M
99C	RA3201	MT 0.25	TUBO TEFLON Ø 6X8	HOSE 6X8
99D	PG5360	MT 0.22	TUBO EPDM NERO Ø12x15	HOSE
99E	RA31834	1	RACCORDO DIRITTO 6X8-M6 FEMMINA	STRAIGHT VALVE 6X8-M6
99F	PE2333A	1	ELETTR.+BOBINA 6W 230/50 REG. FIL.M6	SOLENOID VALVE
99G	RA3147	1	RACCORDO GOMITO 1/8"F-1/8"M	ELBOW VALVE
99H	RA3409	1	VALVOLA N/RITORNO MM MOLLA DEBOLE	NON RETURN VALVE
99L	RA30244	1	RACCORDO MISC. 6X4 1/8FX6X8 DIRITTO	VALVE
100	PG51033	1	GUARNIZIONE TEFLON Ø33.2X40X2	GASKET
101	RA53277	1	TAPPO OTTONE C/SONDA 110+SIC. 15 bar	CAP
102	IS4020	1	ISOLANTE CALDAIA STEAM-TECH DX	BOILER INSULATION
	IS4021	1	ISOLANTE CALDAIA STEAM-TECH SX	BOILER INSULATION
104	VI7318	2	ROND. DENT. Ø4	WASHER
105	VI7152	1	VITE AUTOF. CR. NERA 3.5X9.5	SCREW
106	PE2334	1	TERMOSTATO 175° RIPRISTINO	THERMOSTAT
107	PE23447	1	TERMOSTATO 235°C R.A. 16A	THERMOSTAT
108	VI7318	1	RONDELLA DENTELLATA M4	WASHER
109	VI7130	1	VITE AUT. NIC. TC TC 3.5x9.5	SCREW 3,5X9,5
110	PG52704	1	GUARNIZIONE SILICONE Ø50 SP.4(REV.2)	GASKET
111	RA31634	1	TAPPO DRENAGGIO 1 1/2" F (REV.1)	CAP
111A	85120230	3	VITE TBEI ISO 7380 M6X16 INOX	SCREW
111B	PG53015	MT 0.36	TUBO SILICONE TELATO INOX Ø5X11	HOSE
111C	PG5209	2	FASCETTA STRIK MONO.9 -11	CLAMP
111D	RA3201	MT 0.19	TUBO TEFLON Ø6X8	HOSE

111E	PG5360	MT 0.11	TUBO EPDM NERO Ø12x15	HOSE
111F	RA3167	1	RACCORDO GOMITO 6X8-1/8F	ELBOW VALVE
111G	12004T	1	UG. ROTONDO MASCHIO OTT. 1/8"M	MALE NOZZLE + STEAM HOSE
111H	PG5142	2	OR 9.25X1.78 VITON NERO	O-RING
112	CA1143A	1	CARROZZERIA PST SUP. J/MAX BLU H480	PST BODY – J/MAX
113	IS40314	MT 0.56	SIGILLANTE SCHIUMA PVC GRIGIO 3X6	SEALER
114	010107	2	MANIGLIA NERA	HANDLE
115	RA30967	1	STAFFA SUPP. MANIGLIONE JR STAR MAX	MOUNT BASE
116	VI7128	4	VITE 8.8 FERRO ZN 6X25	SCREW
117	VI7320	4	ROND. GREMB. ZN 6X24	WASHER
118	VI7201	4	DADO ZN Ø6	NUT
119	PE2133	1	PRESA 10-16A 250V C/S SCHUKO	ELECTRIC SOCKET 16A 250V
120	VI7157	4	VITE 4.8 ZN TC M4X16	SCREW
121	PG5069G	1	IMBUTO FILETTATO GIALLO	THREADED FUNNEL
122	PG5069B	1	IMBUTO FILETTATO BLU	THREADED FUNNEL
123	RA3324	2	TAPPO NERO PER IMBUTO	FUNNEL CAP
124	VI7056	6	VITE M6X16 ZN BUTTON HEAD	SCREW
125	VI7316	6	ROND, GREMB. ZN 6X16	WASHER
126	VI7056	6	VITE M6X16 ZN BUTTON HEAD	SCREW
130	PG5032	2	VOLANTINO TMP V1/30/V-M6X20	HANDLE WHEEL SCREW