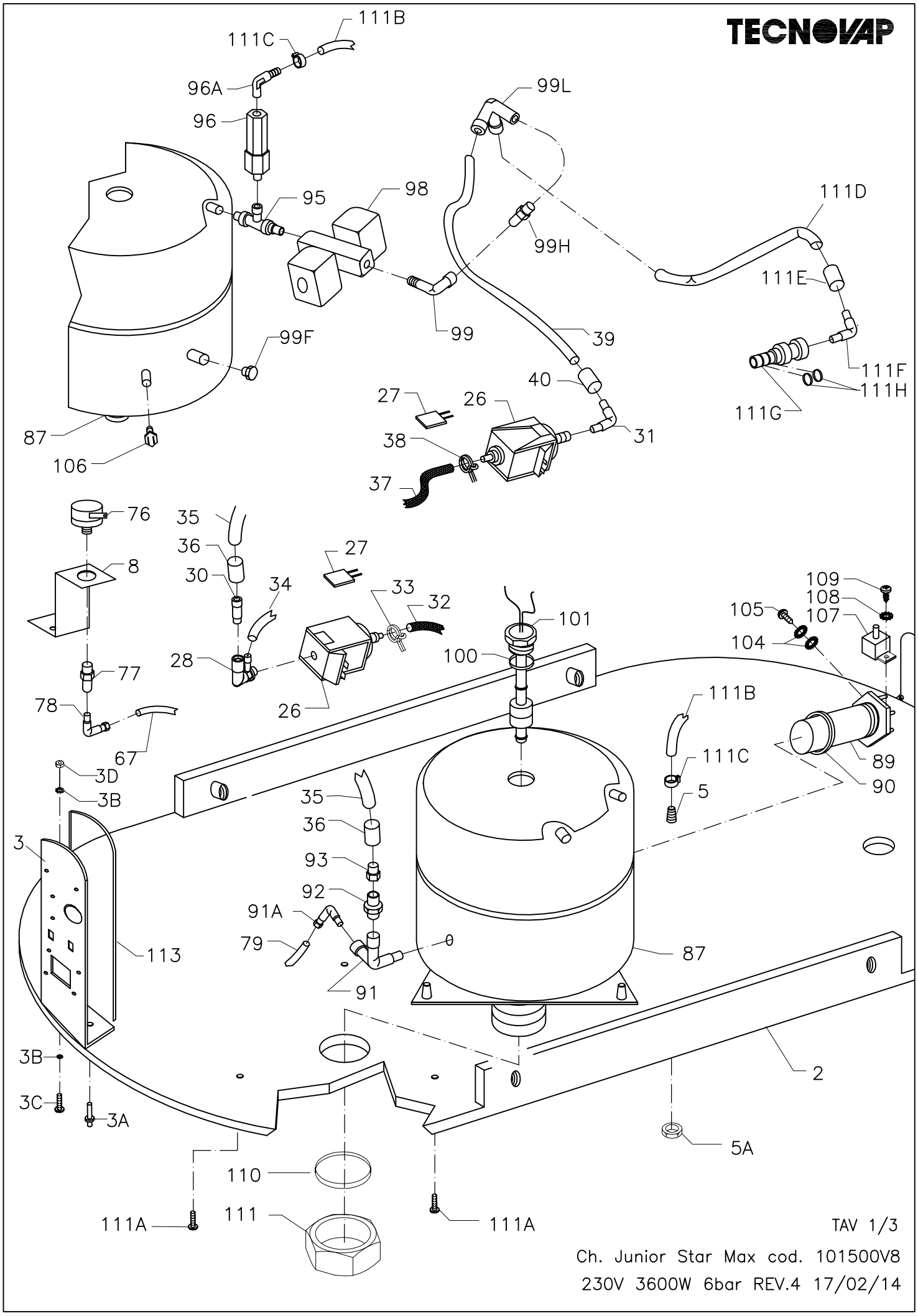
TECNOVAP
111B
111C
96A
96
99L
95
98
111D
99H
111E
99
39
99F
111F
111H
40
111G
27
26
31
87
38
106
37
76
35
36
27
8
30
34
33
32
109
108
105
107
101
104
28
100
77
26
78
111B
67
111C
89
3D
5
90
3B
35
36
3
93
92
91A
79
113
87
91
3B
2
3C
3A
5A
110
111A
111
111A
TAV 1/3
Ch. Junior Star Max cod. 101500V8
230V 3600W 6bar REV.4 17/02/14

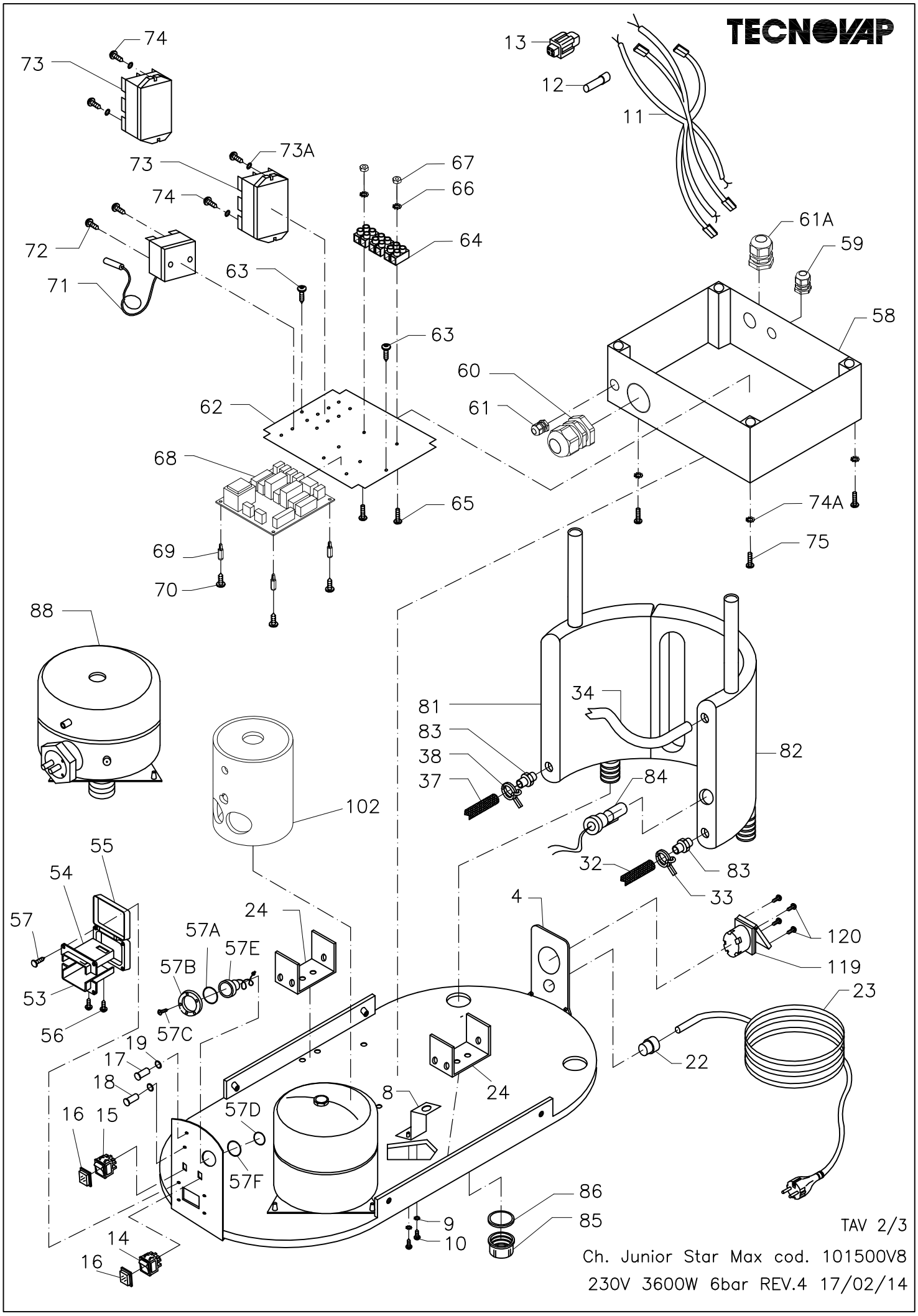
TECNOVAP
74
73
73A
73
74
72
71
13
12
11
67
66
64
63
63
61A
59
58
60
61
62
68
65
74A
75
69
70
88
81
83
38
37
34
82
84
102
32
83
33
55
54
57
53
56
57A
57E
57B
57C
24
4
120
119
23
22
19
17
18
16
15
57D
57F
8
24
86
85
9
10
14
16
TAV 2/3
Ch. Junior Star Max cod. 101500V8
230V 3600W 6bar REV.4 17/02/14

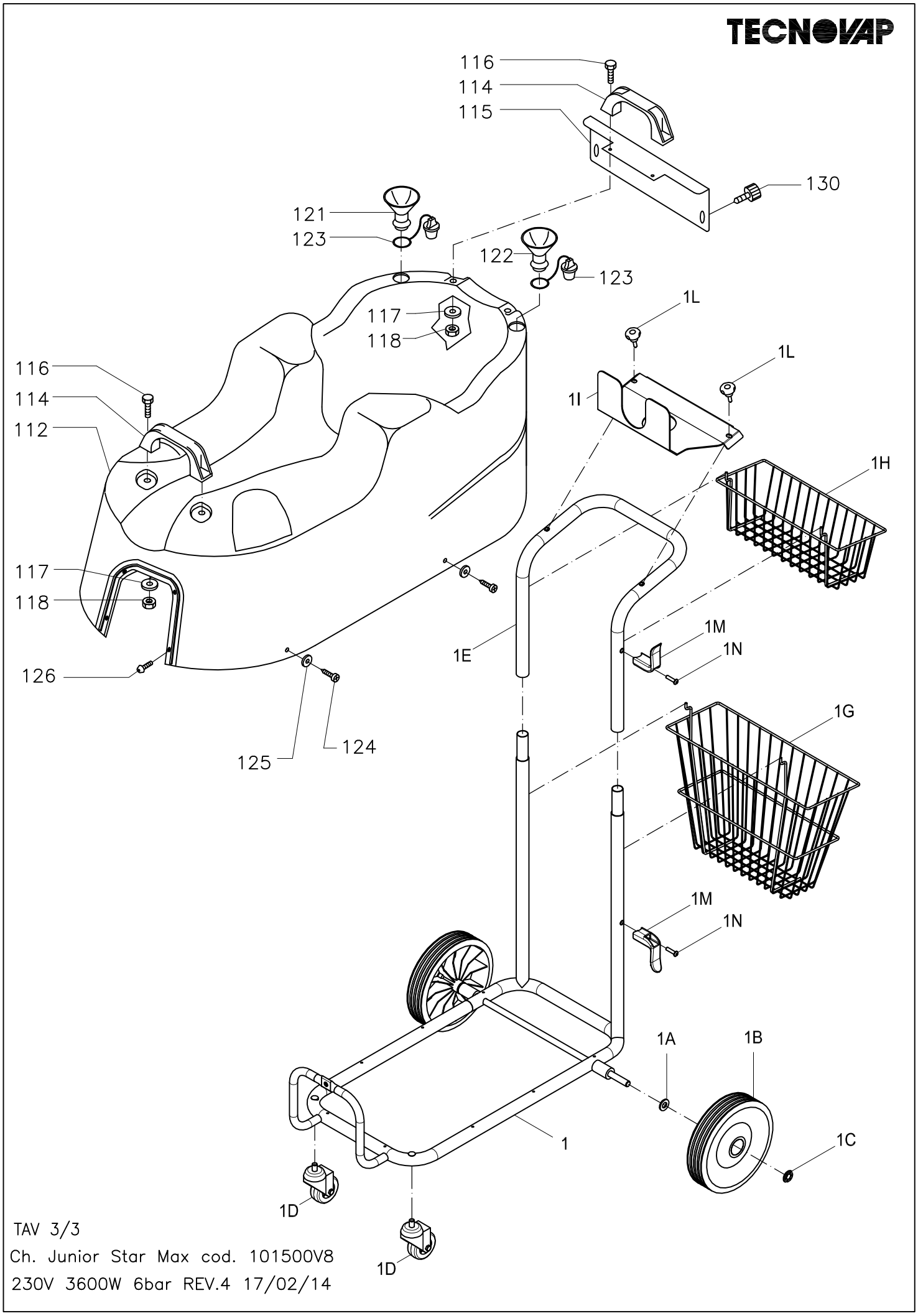

TAV 3/3

Ch. Junior Star Max cod. 101500V8

230V 3600W 6bar REV.4 17/02/14

CH. JUNIOR STAR MAX 3600W 230V 6bar cod. 101500V8 REV. 4 17/02/14				
Pos.	**Codice**	**Q.tà**	**Denominazione**	**Denomination**
1	CR4007AV1	1	CARRELLO JUNIOR STAR (LATO RUOTE)	TROLLEY - BASE
1A	VI73003	2	RONDELLA GREMBIULINA 12X24	WASHER 12x24
1B	PG5416	2	RUOTA POSTERIORE Ø200 STEAM TECH	REAR WHEEL ø200
1C	VI7218	2	DADO M12x1,25 OTTONE	NUT M12x1,25 BRASS
1D	PG5404	2	RUOTA Ø60 10MAX15 GIREVOLE COL. GRIGIO	WHEEL ø60 M10x15 - SWIVEL
1E	CR4007B	1	CARRELLO JUNIOR STAR (MANIGLIONE)	TROLLEY - HANDLEBAR
1G	CR8000	1	CESTELLO 400X260X150	BASKET 400X260X150
1H	CR4002E	1	CESTELLO 345X140X110	BASKET 345X140X110
1I	CA02013	1	STAFFA AVVOLGI TUBI	HOSE HOLDER
1L	PG5032	2	VOLANTINO M6x20	KNOB M6x20
1M	PP00013	2	MEZZA MANIGLIA AVVOLGICAVO	CABLE SUPPORT HANDLE
1N	VI81004	2	VITE TBEI M6X25	SCREW M6X25
2	CA11446V1	1	CARROZZERIA INFERIORE NERA	CHASSIS
3	CA11457	1	STAFFA ANTERIORE PANNELLO	FRONT BRACKET
3A	VI70435	1	RIVETTO ACCIAIO Ø6X15	RIVET STEEL Ø6X15
3B	VI73036	2	RONDELLA DENTELLATA INOX M6 DIN6798A	WASHED M6
3C	VI76006	1	VITE M6X12 BUTTON HEAD INOX ISO7380	BUTTON HEAD SCREW M6X12
3D	VI76012	1	DADO M6 INOX UNI5588 ISO4032 UNI EN24032	NUT M6 INOX
4	CA11466V1	1	STAFFA POSTERIORE ENTRATA	BACK BRACKET
5	RA3020	1	PORTAGOMMA 7 X1/8 MASCHIO	TUBE COUPLER
5A	VI72038	1	GHIERA 1/8"G OTTONE	BRASS NUT 1/8"G
8	CA11477	1	STAFFA PORTA PRESSOSTATO	MOUNT BASE
9	VI7318	2	ROND. DENT. Ø4	WASHER
10	VI71615	2	VITE TC M4X12 ZN UNI 7687 DIN 7985	SCREW
11	PE20502V2	1	CABLAG. CH.JR STAR MAX 230V 3600W	WIRING
12	PE2012	7	CONTATTO FEMMINA	CONTACT
13	PE2177	1	FRUTTO PRESA 7P+T	PLUG BODY 7P+T
14	PE12201	1	INTERRUTTORE 20A NERO C/LED RETE	BOILER SWITCH
15	PE12201	1	INTERRUTTORE 20A NERO C/LED RETE	GENERAL POWER SWITCH
16	PG5021	2	CAPP. QUADRATO GRANDE	RUBBER SWITCH PROTECTION
17	PE22257	1	SPIA LUMINOSA VERDE F/D	GREEN CONTROL LIGHT
18	PE22197	1	SPIA LUMINOSA ROSSA F/D	RED CONTROL LIGHT
19	PG5106	2	OR 9.25X1.78 NBR GRIGIO RAL7035	O-RING
22	PE20033	1	PRESSACAVO OTT/NIC M25X1,5 + GHIERA	CABLE PRESS
23	PE25308	1	CAVO 3X2,5 M8 NEOPRENE SCHUKO	CABLE
24	RA3056	2	STAFFA SUPP. POMPE	MOUNT BASE
26	PE2404	2	POMPA ET500 P-1/8"F NBR 120/60	PUMP ET500
27	PE2408	2	TERMOPROTETTORE 100℃	THERMAL CUT OUT 100°C
28	PE24011	1	DEAREATORE A GOMITO 90°PER POMPA	BLEEDER VALVE FOR PUMP
30	RA30259	1	RACCORDO DIRITTO 6X8 - 1/8"M CIL. C/OR	STRAIGHT VALVE
31	RA33013	1	RACCORDO GOMITO 6X4-1/8M GIREVOLE	ELBOW VALVE
32	PG5327	MT 0.18	TUBO GOMMA CALZ. NERO Ø4X8	HOSE
33	PG5247	2	FASCETTA BIFILARE 9.8-10.4	CLAMP
34	PG5365	MT 0.35	TUBO PVC TRASPARENTE Ø6X9	HOSE
35	RA3201	MT 0.2	TUBO TEFLON Ø6X8	HOSE
36	PG53006	MT 0.19	TUBO EPDM 13,5X8,5 NERO	HOSE
37	PG5327	MT 0.18	TUBO GOMMA CALZ. NERO Ø4X8	HOSE
38	PG5247	2	FASCETTA BIFILARE 9.8-10.4	CLAMP
39	RA3209	MT 0.29	TUBO TEFLON Ø6X4	HOSE
40	PG5338	MT 0.28	TUBO GOMMA EPDM NERO Ø7X10	HOSE
53	120102	1	CORPO PRESA INFERIORE	BOTTOM SOCKET COVER
54	120101	1	CORPO PRESA SUPERIORE	TOP SOCKET COVER
55	PP0008	1	SPORTELLINO COPRI PRESA	SOCKET PROTECTION COVER
56	VI7105	2	VITE RAPID-FIX ZN TC 3.9X16	SCREW
57	VI7341	4	VITE AUTOF. Z.NERA TC TC 3,9X19 UNI6954	SCREW
57A	PG5115	1	OR 34.65X1.78 NBR NERO	O-RING 34,65X1,78
57B	1200117V1	1	CORNICE TERMOMETRO DIGITALE NERA	THERMOMETER FRAME
57C	VI7105	5	VITE RAPID FIX ZN.TC.3,9X16 NERA	SCREW 3,9X16
57D	PG5123	1	OR 29,82X2,62 SILICONE ROSSO	O-RING
57E	PE24016	1	TERMOMETRO/CONTAORE COMPLETO	THERMOMETER/HOUR METER
57F	PG51237	1	OR 3193 Ø48,89X2,62 MANOMETRO DIGITALE	O-RING
58	PE44207	1	CASSETTA FORATA IP56 240X190	ELECTRIC BOX
59	PE2014	1	PRESSACAVO PLASTICA GRIGIA PG13,5	CABLE PRESS
60	PE20037	1	PRESSACAVO PLASTICA GRIGIA ISO40	CABLE PRESS
61	PE20034	1	PRESSACAVO C/DADO PLASTICA PG9	CABLE PRESS

61A	PE20031	1	PRESSACAVO PLASTICA PG21 + GHIERA	CABLE PRESS
62	RA44208V1	1	LAMIERA ZN SP.10/10 X PE44207 X J/MAX	SHEET
63	VI7113	2	VITE AUT.TC ZN B 3,9X6,5 DIN7981	SCREW
64	PE2015	0.5	MORSETTIERA MAMMUTH Ø4 MM2 12	MAMMUTH Ø4
65	VI7154	2	VITE 4.8 METALLO ZN TC. M3X20	SCREW
66	VI7319	2	RONDELLATA ZN M3	WASHER
67	VI7211	2	DADO ZN M3 UNI5588	NUT
68	PE2347D	1	SCHEDA C.ELETTR.TVAP20 C/PLUS	ELECTRONIC BOARD
69	PG5064	4	DISTANZIALE FIL. M3 L.15 C/GANCIO	THREADED SPACER
70	VI7109	4	VITE TSP TC M3X10 ZN	SCREW
71	PE2340	1	TERMOSTATO 240℃ A BULBO R.A.	THERMOSTAT
72	VI7121	2	VITE M4X6 TC TC UNI7687	SCREW
73	PE2010	2	RELAY 200/240V AC 20A	RELAY
73A	VI7325	4	RONDELLA PIANA M4	WASHER M4
74	VI7113	4	VITE AUT. TC ZN B 3.9X6.5 UNI6954	SCREW
74A	VI7318	4	RONDELLA DENTELLATA M4	WASHER
75	VI71615	4	VITE TC UNI 7687 DIN 7985 ZN M4X12	SCREW
76	PE2411	1	PRESSOSTATO 16A 250V 4-9bar	PRESSURE SWITCH
77	RA31427	1	RACCORDO DIRITTO 1/8"FX1/8"F	STRAIGHT VALVE
78	RA3155	1	RACCORDO GOMITO 1/8M-4X2 OGIVA	ELBOW VALVE
79	RA3210	MT 0.38	TUBO TEFLON Ø4X2	HOSE
81	CA12FD7	1	SERBATOIO JR. MAX DETERGENTE FORATO	TANK
82	CA12FW7	1	SERBATOIO JR. STAR MAX ACQUA FORATO	TANK
83	RA3140	2	PORTAGOMMA C/FILTRO OTTONE	RUBBER OUTLET + BRASS NOZZLE
84	PE2327	1	INTERRUTTORE REED GALLEGG. ORIZZ.	REED SWITCH HORIZONTAL FLOAT
85	RA3320	2	TAPPO NERO SERBATOIO	CAP
86	PG5123	2	OR 29.8X2.62 SILICONE ROSSO	O-RING
87	0900382V2	1	CALDAIA COMPL. J/STAR MAX 3600W 230V	BOILER
88	9900382V2	1	CALDAIA C/RES. J/STAR MAX 3600W 230V	BOILER W/HEATING ELEMENT
89	PE25226	1	RESISTENZA 230V 3600W 1" ¼	HEATING ELEMENT
90	PG51396	1	GUARNIZIONE RAME Ø42 X 50 X 1,5	GASKET
91	RA30803	1	RACCORDO 75°1/8FX1/8FX1/8M	75°VALVE
91A	RA3155	1	RACCORDO GOMITO 1/8M-4X2 OGIVA	ELBOW VALVE
92	RA3408	1	VALV. N/RIT. MM MOLLA DURA	NON RETURN VALVE
93	RA31904	1	RACCORDO DIRITTO 6X8-1/8F	STRAIGHT VALVE
95	RA31035	1	RACCORDO A T 1/8FX1/8FX1/8M	3-WAYS VALVE
96	RA3411	1	VALVOLA 1/8"M 7,5 bar SD.1°	SAFETY VALVE
96A	RA30372	1	RACCORDO GOMITO 3/8M PG Ø7	ELBOW VALVE
98	PE2337	1	ELETTROV.6650+2 BOB. 230V 1X1,5-1X2,5	SOLENOID VALVE
99	RA3147	1	RACCORDO GOMITO 1/8F-1/8M	ELBOW VALVE
99F	RA31689	1	TAPPO OTTONE 1/4"f	CAP
99H	RA3409	1	VALVOLA N/RITORNO MM MOLLA DEBOLE	NON RETURN VALVE
99L	RA30254	1	RACCORDO MISCELATORE	VALVE
100	PG51033	1	GUARNIZIONE TEFLON Ø33.2X40X2	GASKET
101	RA33277	1	TAPPO OTTONE C/SONDA+SIC. 12 bar	CAP
102	IS40040	1	ISOLANTE LATERALE CALDAIA	BOILER INSULATION
104	VI7318	2	ROND. DENT. Ø4	WASHER
105	VI7152	1	VITE AUTOF. CR. NERA 3.5X9.5	SCREW
106	PE2303	1	TERMOSTATO 160°RIPRISTINO	THERMOSTAT
107	PE23447	1	TERMOSTATO 235℃ R.A. 16A	THERMOSTAT
108	VI7318	1	RONDELLA DENTELLATA M4	WASHER
109	VI7130	1	VITE AUT. NIC. TC TC 3.5x9.5	SCREW 3,5X9,5
110	PG52074	1	GUARNIZIONE SILICONE Ø50 SP.4(REV.2)	GASKET
111	RA31634	1	TAPPO DRENAGGIO 1 1/2" F (REV.1)	CAP
111A	85120230	3	VITE TBEI ISO 7380 M6X16 INOX	SCREW
111B	PG53015	MT 0.36	TUBO SILICONE TELATO INOX Ø5X11	HOSE
111C	PG5209	2	FASCETTA STRIK MONO.9 -11	CLAMP
111D	RA3201	MT 0.19	TUBO TEFLON Ø6X8	HOSE
111E	PG5360	MT 0.11	TUBO EPDM NERO Ø12x15	HOSE
111F	RA3167	1	RACCORDO GOMITO 6X8-1/8F	ELBOW VALVE
111G	12004T	1	UG. ROTONDO MASCHIO OTT. 1/8"M	MALE NOZZLE + STEAM HOSE
111H	PG5142	2	OR 9.25X1.78 VITON NERO	O-RING
112	CA1143A	1	CARROZZERIA PST SUP. J/MAX BLU H480	PST BODY – J/MAX
113	IS40303	MT 0.56	GUARNIZIONE ADESIVA GOMMA BIANCA 9X4mm	SEAL ADHESIVE RUBBER WHITE
114	010107	2	MANIGLIA NERA	HANDLE
115	RA30967	1	STAFFA SUPP. MANIGLIONE JR STAR MAX	MOUNT BASE
116	VI7128	4	VITE 8.8 FERRO ZN 6X25	SCREW

117	VI7320	4	ROND. GREMB. ZN 6X24	WASHER
118	VI7201	4	DADO ZN Ø6	NUT
119	PE2133	1	PRESA 10-16A 250V C/S SCHUKO	ELECTRIC SOCKET 16A 250V
120	VI7180	4	VITE 4.8 ZN TSP TC M4X12	SCREW
121	PG5069G	1	IMBUTO FILETTATO GIALLO	THREADED FUNNEL
122	PG5069B	1	IMBUTO FILETTATO BLU	THREADED FUNNEL
123	RA3324	2	TAPPO NERO PER IMBUTO	FUNNEL CAP
124	VI7056	6	VITE M6X16 ZN BUTTON HEAD	SCREW
125	VI7316	6	ROND, GREMB. ZN 6X16	WASHER
126	85120230	6	VITE M6X16 inox BUTTON HEAD	SCREW
130	PG5032	2	VOLANTINO TMP V1/30/V-M6X20	HANDLE WHEEL SCREW